A

Mini Project Report

On

DESIGN AND IMPLEMENTATION OF SOLAR POWER MONITORING SYSTEM

Submitted to JNTU HYDERABAD

In Partial Fulfilment of the requirements for the Award of Degree of

BACHELOR OF TECHNOLOGY
IN
INFORMATION TECHNOLOGY

Submitted
By

K.CHANDRA SHEKAR CHARY	**(218R1A1231)**
J.RACHANA	**(218R1A1225)**
J.ABHISHEK	**(218R1A1226)**
M.SREE NAVYANTH	**(218R1A1238)**

Under the Esteemed guidance of

GIRIJA SHANKAR DEWANGAN

Assistant Professor, Department of IT

Department of Information Technology

CMR ENGINEERING COLLEGE

(UGC AUTONOMOUS)

(Accredited by NAAC, Approved by AICTE NEW DELHI, Affiliated to JNTU, Hyderabad)

(Kandlakoya, Medchal Road, R.R. Dist. Hyderabad-501 401)

(2024-2025)

CMR ENGINEERING COLLEGE

(UGC AUTONOMOUS)

(Accredited by NAAC, Approved by AICTE NEW DELHI, Affiliated to JNTU, Hyderabad)

(Kandlakoya, Medchal Road, R.R. Dist. Hyderabad-501 401)

Department of Information Technology

CERTIFICATE

This is to certify that the project entitled **"DESIGN AND IMPLEMENTATION OF SOLAR POWER MONITORING SYSTEM"** is a bonafide work carried out by

K.CHANDRA SHEKAR CHARY	**(218R1A1231)**
J.RACHANA	**(218R1A1225)**
J.ABHISHEK	**(218R1A1226)**
M.SREE NAVYANTH	**(218R1A1238)**

in partial fulfilment of the requirement for the award of the degree of **BACHELOR OF TECHNOLOGY** in **INFORMATION TECHNOLOGY** from CMR Engineering College, affiliated to JNTU, Hyderabad, under our guidance and supervision.

The results presented in this project have been verified and are found to be satisfactory. The results embodied in this project have not been submitted to any other university for the award of any other degree or diploma.

Internal Guide
GIRIJA SHANKAR DEWANGAN
Assistant Professor
Department of IT
CMREC, Hyderabad

Head of the Department
Dr. MADHAVI PINGILI
Professor & HOD
Department of IT
CMREC, Hyderabad

DECLARATION

This is to certify that the work reported in the present project **"DESIGN AND IMPLEMENTAION OF SOLAR POWER MONITORING SYSTEM"** is a record of bonafide work done by us in the Department of Information Technology, CMR Engineering College, JNTU Hyderabad. The reports are based on the project work done entirely by us and not copied from any other source. We submit our project for further development by any interested students who share similar interests to improve the project in the future.

The results embodied in this project report have not been submitted to any other University or Institute for the award of any degree or diploma to the best of our knowledge and belief.

K.CHANDRA SHEKAR CHARY	**(218R1A1231)**
J.RACHANA	**(218R1A1225)**
J.ABHISHEK	**(218R1A1226)**
M.SREE NAVYANTH	**(218R1A1238)**

ACKNOWLEDGEMENT

We are extremely grateful to **Dr. A. Srinivasula Reddy**, Principal and **Dr. Madhavi Pingili**, HOD, **Department of IT, CMR Engineering College** for their constant support.

We are extremely thankful to **Girija Shankar Dewangan,** Assistant Professor , Internal Guide, Department of IT, for his constant guidance, encouragement and moral support throughout the project.

We will be failing in duty if we do not acknowledge with grateful thanks to the authors of the references and other literatures referred in this Project.

We express our thanks to all staff members and friends for all the help and co-ordination extended in bringing out this project successfully in time.

Finally, We are very much thankful to our parents who guided us for every step.

K.CHANDRA SHEKAR CHARY	**(218R1A1231)**
J.RACHANA	**(218R1A1225)**
J.ABHISHEK	**(218R1A1226)**
M.SREE NAVYANTH	**(218R1A1238)**

CONTENTS

TOPIC	PAGE NO
ABSTRACT	**I**
LIST OF FIGURES	**II**
LIST OF TABLES	**III**
1. INTRODUCTION	**1**
1.1. Introduction & Objectives	1
1.2. Project Objectives	3
1.3. Purpose of the project	3
1.4. Existing System	3
1.5. Proposed System With features	5
1.6. Input and Output Design	6
2. LITERATURE SURVEY	**7**
3. EMBEDDED SYSTEM	**10**
3.1 Need For Embedded Systems	11
3.2 Real Time embedded system	12
3.3. Network communication embedded system	12
3.4. Industrial automation	13
4. HARDWARE DESCRIPTION	**14**
4.1. Arduino Micro controller	14
4.2. IOT ESP8266 Module	16
4.3. Regulated Power Supply	18
4.4 LED	19
4.5 Mercury switch	22
4.6 LCD Display	23
4.7 Buzzer	25

5. SOFTWARE DESIGN **27**

5.1 Express PCB 27

5.2 System Architecture 32

5.3 UML Diagrams 36

5.4 Functional Requirements 42

5.5 Non-Functional Requirements 43

6. CODE AND IMPLEMENTATION **45**

6.1 Source code 45

6.2 Software Requirements 48

6.3 Data Dictionary 49

7. SYSTEM TESTING 50

7.1 Types of tests 51

7.2 Test Strategy and approach 51

8. OUTPUT SCREENS **53**

9. CONCLUSION **56**

10. FUTURE ENCHANCEMENTS **57**

11. REFERENCES **58**

ABSTRACT

Smart security device presents an automotive localization system using GPS and IOT, alert over IOT for woman security. The system permits localization of the woman and transmitting the position information to the rescue team and over Internet. The system can be interconnected with the alarm system and alert the surrounding people to help woman. This security tracking system is composed of a GPS receiver, Microcontroller and IOT module. When woman need help that time she will press security alert switch then GPS Receiver gets the location information from satellites in the form of latitude and longitude with alert through IOT. The Microcontroller processes this information and this processed information is sent to the certain person using IOT modem. The presented application is a low cost solution for woman in risk. The proposed solution can be used in other types of application like child security, woman security, where the information needed is requested rarely and at irregular period of time (when requested). The IoT Women Safety' will provide safety and security to each and every women, whether rich or poor, whether working or housewife. This plan proposes the way in which each woman could be protected from any mishappening and would be provided help within seconds when in need. Moreover, she does not need to carry any device with her. This idea will let every women walk on the road with their head held high and without any fear. This project is an innovative response to these concerns, aiming to empower women and enhance their safety. The purpose of this project is to develop a sustainable and reliable system aimed at monitoring, tracking, and locating women's safety devices, specifically wallets, when they go missing. The project incorporates GPS technology for accurate tracking within a 2-5km range and utilizes Internet of Things (IoT) for data visualization, monitoring, and analysis. This system is designed to provide women with the means to enhance their safety and security, irrespective of their economic status or occupation. an Internet of things (IOT) platform for data visualization, monitoring and analyzing using an Arduino Uno ESP8266 with Lora WAN capability. An advanced system can be built that can detect the location and health condition of person that will enable us to take action accordingly based on electronic gadgets like GPS, body temperature sensor, pulse rate sensor, motion sensor and IOT. We can make use number of sensors to precisely detect the real time situation of the women in critical abusive situations. The idea to develop a smart device for women is that it's completely comfortable and easy to use as compared with already existing women security solutions such as a separate garment, 2 bulky belts and infamous mobile apps that are just very abstract and obsolete.

LIST OF FIGURES

S.NO	FIGURE NO	DESCRIPTION	PAGENO
1	1.5.1	Block diagram of proposed system	5
2	3	A Modern example of Embedded System	10
3	3.3.1	Network communication embedded systems	13
4	3.3.2	Robot	13
5	4.1.1	Crystal Oscillator	15
6	4.3.1	Regulated Power Supply	18
7	4.3.2	Circuit diagram of Regulated Power Supply with Led connection	19
8	4.4.1	Inside a LED	20
9	4.4.2	Parts of a LED	20
10	4.4.3	Electrical Symbol & Polarities of LED	21
11	4.5.1	TILT Sensor	22
12	4.5.2	Plunger	22
13	4.6.1	LCD Pin diagram	24
14	4.7.1	Buzzer Circuit	26
15	5.2.1	System Architecture	34
16	5.3.1	Sequence Diagram	37
17	5.3.2	Use case Diagram	38
18	5.3.3	Data flow Diagram	39
19	5.3.4	Class Diagram	39
20	5.3.5	Component Diagram	40
21	5.3.6	Activity Diagram	41

LIST OF TABLES

S.NO	TABLE NO	DESCRIPTION	PAGE NO
1	4.6.2	Character LCD pins with Microcontroller	24

1. INTRODUCTION

1.1 Introduction & Objectives

Women feel insecure as they face more harassment problems, not only women even girl child faces the same type of harassment and their entire life becomes a big question mark. They feel unsafe even in their work places, while traveling and in their residence too. Round the clock in a day they feel in secure. So it is essential to make our women feel safe and secure. It is our responsibility to make our women safe and provide a safe and healthy environment for them to live. When compared to men, women are less strong in physic but nowadays they are coming up in all fields equally to men. It is our duty to help them in case of emergency situation. To overcome from the risk the victim can call the resources as soon as possible for getting help and escape from the critical situations like rape, sexual assault, robbery etc. If women are having security apps and the system with them they will feel safe and secure. This security system is useful for women in making them feel they are in assistance of someone. On using this system the victim can call immediately their dear ones when they are in dangerous situation or can send alerts continuously. It can also be used to identify the risky areas and call for help. Mainly the system designed and apps are a great awareness to the working women to feel confident and safe. The only thing they need to do is that the system must be in alert mode.

India is known for its secularism and tradition for many years. Women are treated as goddess in India. Therefore, safety for women in India should be the first priority. There have been innovations that have led to some steps forward in safety of women. Many apps have been built, and there are some devices that women need to carry for their safety. One of which is wrist band. The IoT Women Safety' will provide safety and security to each and every women, whether rich or poor, whether working or housewife. This plan proposes the way in which each woman could be protected from any mishappening and would be provided help within seconds when in need. Moreover, she does not need to carry any device with her. This idea will let every women walk on the road with their head held high and without any fear. The Internet of Things (IoT) has become an era of the web facilities through Internet, which enables devices to connect and exchange information with each other with the help of internet. IoT is a framework that is used for gathering information from physical world such as sensors or triggers or cell phones. It takes that data in some of the OSI Model layer and then it transfer to the server. This paper proposed with a strategy that casualty can shield herself from an outsider by utilizing herself preservation gadget which transmits high electric flow and furthermore she can send ready messages with her area to the relatives and to the cop.

Self Defense Device with GSM alert and GPS tracking with fingerprint verification for women safety[3]. They isolated the procedure into three stages. In stage 1, they planned unique mark recognition. The client finger impression is put away as name and id will be produced. While in the unique mark process, the coordinating will be contrasted and the put away unique mark and the unique mark of the client. At that point, the outcome will be acquired as checked id ought to be equivalent to the id number shown. In the subsequent stage, it includes initiation of high voltage low current circuit. The HVLC circuit is joined to computerized pin number4 of ARDUINO NANO. This pin will get turn on the unique mark acknowledgment of the client and it will be initiated for 15secs.once the HVLC circuit cut off, the pin will get deactivated. At the point when the HVLC circuit is charged on, flash will be created which will assault the stranger. The last procedure infers Sending of message with the area through SIM 808 module. When the unique mark of the client is checked, microcontroller will transmit the AT order to sim 808 module, which pull out the area of the client through GPS. Finally, the GPS message will send to the enlisted number. This paper proposed with a strategy that casualty can shield herself from an outsider by utilizing herself preservation gadget which transmits high electric flow and furthermore she can send ready messages with her area to the relatives and to the cop. For abrupt attacks, she can utilize spotlight as the additional security.

An advanced system can be built that can detect the location and health condition of person that will enable us to take action accordingly based on electronic gadgets like GPS, body temperature sensor, pulse rate sensor, motion sensor and IOT. We can make use number of sensors to precisely detect the real time situation of the women in critical abusive situations. The heartbeat of a person in such situations is normally higher which helps make decisions along with other sensors like motion sensors to detect the abnormal motion of the women while she is victimized. The idea to develop a smart device for women is that it's completely comfortable and easy to use as compared with already existing women security solutions such as a separate garment, bulky belts and infamous mobile apps that are just very abstract and obsolete. The Smart band integrated with Smart phone has an added advantage so as to reduce the cost of the device and also in reduced size. The GPS and IOT can be used of a smart phone. This also enables in reduced power use and that the watch can be installed with which comes in handy for several days on a single shot of charge. The aim of this proposed system is to design and develop a sustainable system and platform to monitor, track and locate wallets; when missing. Implementing GPS system for real tracking at 2-5km range and to develop an Internet of things (IOT) platform for data visualization, monitoring and analyzing using an Arduino Uno ESP8266 with Lora WAN capability. This also enables in reduced power use and that the watch can be installed with which comes in handy for several days

on a single shot of charge. The project's goal is to create a smart and user-friendly device for women's security that surpasses the limitations of traditional solutions.

1.2 Project Objective

Provide the 100% safe environment. This project focuses on a security system that is designed solely to serve the purpose of providing security and safety to women so that they never feel helpless while facing such social challenges. This project describes about a smart intelligent security system for women.

1.3 Purpose of the Project

The primary purpose of this project is to develop a comprehensive and sustainable system for monitoring, tracking, and locating women's safety devices, with a specific focus on wallets. This system integrates cutting-edge technologies to ensure women's security, regardless of their economic background or profession. It seeks to address the challenges faced by women in their daily lives and provide them with an effective safety solution. The project's goal is to create a smart and user-friendly device for women's security that surpasses the limitations of traditional solutions. It aims to provide women with a comfortable and effective tool to ensure their safety in the face of danger, surpassing the inadequacies of existing methods, such as separate garments, bulky belts, or outdated mobile applications.

1.4 Existing System with Disadvantages

Women and girl child in many of the countries feel unsafe and frustrated due to lack of security and safety for them. This system is used along with the advanced specialized software for tracking the women who are in dangerous situation. Nowadays the majority of the employers ensure their women employee who is working late nights. The security system with technologies like GSM, GPS was used. In the context of women's safety and security, the existing systems primarily consist of various mobile applications and wearable devices that aim to provide women with tools to enhance their personal security. These solutions often offer features such as location tracking, emergency alerting, and self-defense mechanisms.

Disadvantages:

- Reliance on external infrastructure: Existing systems may rely on GPS or GSM networks, which can be unreliable or inaccessible in certain areas, limiting their effectiveness.
- False alarms: Existing systems may have a higher chance of generating false alarms, leading toun necessary panic or fatigue for users and emergency responders.

- Limited coverage: GPS-based systems may have limitations in indoor environments or areas with poor satellite reception, reducing their effectiveness in certain situations.
- Privacy concerns: Existing systems may require continuous tracking or monitoring, raising concerns about privacy and data security.
- Cost: Implementing and maintaining existing systems can be expensive, making them less accessible for widespread deployment.
- Limited Device Compatibility: Many existing women's safety applications are designed for specific mobile platforms (e.g., Android or iOS), limiting their accessibility to users with different types of devices. This restricts the reach of such solutions and may not cater to individuals who do not own smartphones.
- Short-Range Communication: Several of these applications rely on short-range communication technologies like Bluetooth. While useful in close proximity, these technologies may not be effective for sending alerts or messages over longer distances. 4
- Dependency on Mobile Networks: Most mobile-based safety apps depend on a mobile network or internet connectivity to function. In areas with poor network coverage, the effectiveness of these apps can be severely compromised.
- Battery Consumption: Running safety apps continuously can lead to significant battery drain, reducing the overall usability of the device in emergency situations.
- Application-Specific Limitations: Many existing solutions are application-specific, meaning they provide a limited set of features tailored to a single purpose. Users often need to switch between different apps to access various security functions, making the experience fragmented and cumbersome.
- Limited Alerting Options: These systems often rely on notifying a predefined set of contacts, such as friends or family members, in case of an emergency. However, they may not offer robust connectivity with emergency services or law enforcement.
- Complexity and User Interface: Some existing apps may have complex user interfaces, requiring users to navigate through multiple screens and options to activate safety features. In high-stress situations, this complexity can be a drawback.
- Costly Hardware: Certain wearable devices marketed for women's safety can be expensive and may require a subscription service for full functionality, which might not be affordable for everyone.
- Lack of Smart Integration: These solutions may not offer smart integration with other devices or systems, limiting their potential to provide a comprehensive security ecosystem.

1.5 Proposed System with Features

Proposed system implemented using GPS, and IOT. Wireless technology. This system consisting a panic button which alerts the authorized person. A security device which is in the form of button. The button is set alongside the clothing, when the casualty presses the button, it will send the alarm message to the enlisted numbers with the assistance of GPS system. The button gadget will be empowered with the camera to trap the Images and video, and every one of those caught pictures will be sent to the enrolled number. The area following framework includes refreshing of the present area of the casualty by the short message service (SMS), to her relatives and the cop. The area following framework will refresh scope and longitude of the casualty from numerous spots and different times. Once the user, triggers the area following system, the miniaturized scale controller will order the GSM to transmit the information utilizing commands

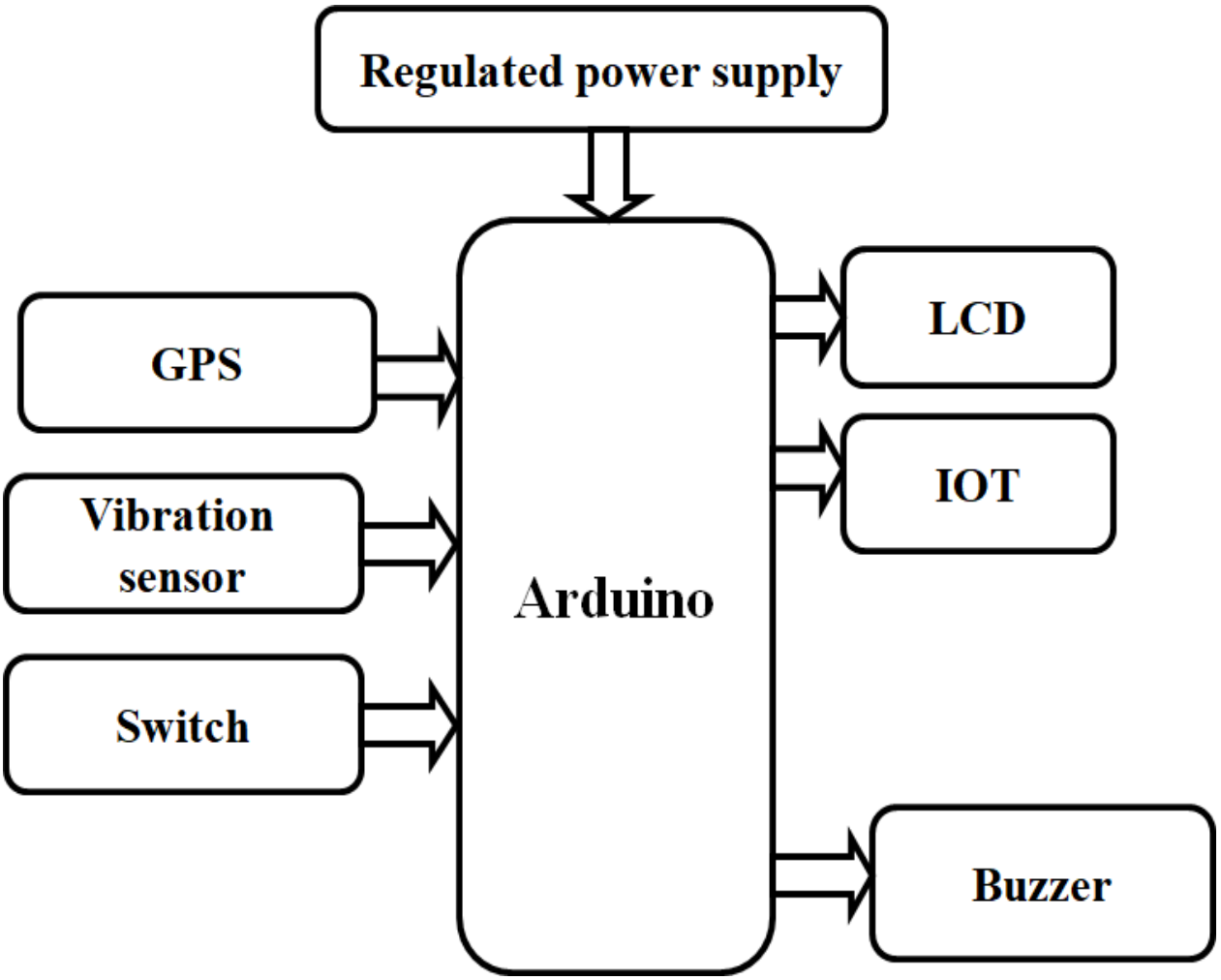

15.1: Block diagram of proposed system

1.6 Input and Output Design

Input Design

- Input design for a smart security device aimed at providing protection for women is a critical component in ensuring the device's efficacy and user-friendliness. It encompasses the creation of a user interface that is intuitive and tailored to the specific needs and concerns of female users.
- The input design should prioritize user-friendly menus and controls, making it easy for women to access vital functions, and it should include seamless integration with emergency services, trusted contacts, and geolocation services for real-time tracking.
- Furthermore, inclusivity is paramount, considering language preferences and accessibility options to accommodate a diverse user base. Robust security measures are essential to protect user data and privacy. Overall, a well-crafted input design empowers women to feel secure and confident when using the smart security device.

Output Design

- Output design for a smart security device designed to provide protection for women is equally important in ensuring the device's overall effectiveness. This aspect of design primarily focuses on how the device communicates information and feedback to the user. Clear, timely, and user- friendly output is essential to instill a sense of security and empower the user.
- The output design should include features such as alert notifications through various channels, including visual, auditory, and tactile feedback, ensuring that the user is immediately aware of any potential threats or emergencies. Messages and alerts should be easy to understand and actionable, providing instructions or suggesting appropriate responses in different situations
- Additionally, the output design should support discreet communication, enabling users to signal for help without alerting potential aggressors. It should also incorporate a real-time tracking feature that can be shared with trusted contacts or emergency services to ensure rapid response in critical situations.
- Moreover, the device's output should be designed to store and present historical data or evidence, which could be valuable in legal proceedings. Inclusive design principles are essential to cater to the diverse needs of women, taking into account language preferences, accessibility.

2. LITERATURE SURVEY

1. "Mobile Tracking Application for Locating Friends Using LBS"

Author: Dhole.

Women and girl child in many of the countries feel unsafe and frustrated due to lack of security and safety for them. Each and every minute somewhere in the world they are harassed and losing their life. At that situations women feel helpless and don't find any way for protecting them and call for help from the family members or from nearer ones.

2. "Efficient Tracking for Women Safety and Security Using IOT"

Author: S.Vahini, N.Vijaykumar

World the major critical issue is the women security. Each and every individual is responsible for making them feel safe when they are outside or when they are in home . Everyone must ensure to help women and come out of this issue.

3. "Smart girls security system"

Author: B.Chougula

In today's world the major critical issue is the women security. Each and every individual is responsible for making them feel safe when they are outside or when they are in home. Everyone must ensure to help women and come out of this issue.

4. "Women and children's security Based Location Tracking System"

Author: Sabari.M, Sorna Rajeswari.M

The primary function of this device is to send SMS and the victim's current area to the closest police headquarters and family members.

5. "A smart approach to support the female rape victims"

Author: S. R. Mahmud, S. N. Tumpa, A. B. Islam

To avoid rape, another paper also proposed a smart mobile application "BONITAA" which also warped with various features such as SMS and location sending via GSM, health supports, medical supports, counseling, self-defense tips for the rape victims.

6. "A wearable device for the safety of women"

Authors: M. N. Islam

This security system is useful for women in making them feel they are in assistance of someone. On using this system the victim can call immediately their dear ones when they are in dangerous situation or can send alerts continuously.

7."Design and implementation women safety device"

Authors: S. Priyanka, Shivashankar, K. P. Roshini, S. P. Reddy

The aim of this proposed system is to design and develop a sustainable system and platform to monitor, track and locate wallets; when missing. Implementing GPS system for real tracking at 2-5km range and to develop an Internet of things(IOT)

8. "Reach Out Smart Safety Device"

Authors: U. Rai, K. Miglani, A. Saha

The prototype is simple but large in size. Raspberry-Pi needs the always-on internet to capture the location's coordinates. N. R. Sogi et al. Also proposed a Raspberry-Pi based IoT device. They called their device as "SMARISA" smart ring for women's safety.

9. " Smart Ring for Women Safety Using IoT"

Author:N. R. Sogi, P. Chatterjee, U. Nethra, and V. Suma

Women's safety is a critical issue that has been gaining increasing attention in recent years. The Internet of Things (IoT) has the potential to play a significant role in enhancing women's safety by providing innovative solutions for personal safety.

10. "Smart Intelligent System for Women and Child Security"

Authors: S. K. Punjabi, S. Chaure, U. Ravale, and D. Reddy

They spent a lot on building such a device with a mobile application. It can not be affordable for every woman in our society, and also the application-based interface is not flexible for all end users.

11. "IoT Based Smart Security Gadget for Women's Safety"

Author: M. R. Tejonidhi, Aishwarya, K. Chaithra, and M. K. Dayana

Women are bringing their unique perspectives to the design of IoT interfaces, making them more user-friendly and accessible to a wider range of people.

12. "Internet of Things (IOT) based smart band to ensure the security"

Author: K. Thamaraiselvi, S. Rinesh, and L. Ramaparvathy

The potential to play a significant role in enhancing women's safety by providing innovative solutions for personal safety, tracking, and communication.

13. Implementation Women Safety Device

Author:T. Sen, A. Dutta, S. Singh, and V. N. Kumar

Women's safety is a critical issue that has been gaining increasing attention in recent years. The Internet of Things (IoT) has the potential to play a significant role in enhancing women's safety by providing innovative solutions for personal safety, tracking, and communication.

14. "Smart Shoe for Women Safety

Authors: V. Sharma, Y. Tomar, and D. Vydeki

Smart shoes can be equipped with GPS tracking, which allows users to share their location with friends or family in case of an emergency. This can help to deter attackers, as they will know that their whereabouts are being tracked.

15. "Design and Implementation of Women Auspice System by Utilizing GPS and GSM

Author: N. Islam, M. R. Hossain, M. Anisuzzaman

IoT-based tracking devices can be used to track the location of women who are traveling alone or working in remote areas. These devices can provide peace of mind to both the women using them and their loved ones. Some examples of IoT-based tracking devices include:

16. "Safety Assistant And Harassment Prevention For Women" Author: M. R. Ruman, J. K. Badhon and S. Saha

Women's safety is a critical issue that has been gaining increasing attention in recent years. The Internet of Things (IoT) has the potential to play a significant role in enhancing women's safety by providing innovative solutions for personal safety, tracking, and communication.

17. "Smart Wearable Device for Women Safety Using IoT"

Author: V. Hyndavi, N. S. Nikhita, and S. Rakesh

The device contains a shock generator also. Integration of various extra facilities, the prototype is too large to carry. To acknowledge these problems, we have also built our safety device to support the women and child.

3. EMBEDDED SYSTEM

An embedded system is a computer system designed to perform one or a few dedicated functions often with real-time computing constraints. It is embedded as part of a complete device often including hardware and mechanical parts. By contrast, a general-purpose computer, such as a personal computer (PC), is designed to be flexible and to meet a wide range of end-user needs. Embedded systems control many devices in common use today.

An embedded system is a computer system designed to perform one or a few dedicated functions often with real-time computing constraints. It is embedded as part of a complete device often including hardware and mechanical parts. By contrast, a general-purpose computer, such as a personal computer (PC), is designed to be flexible and to meet a wide range of end-user needs. Embedded systems control many devices in common use today.

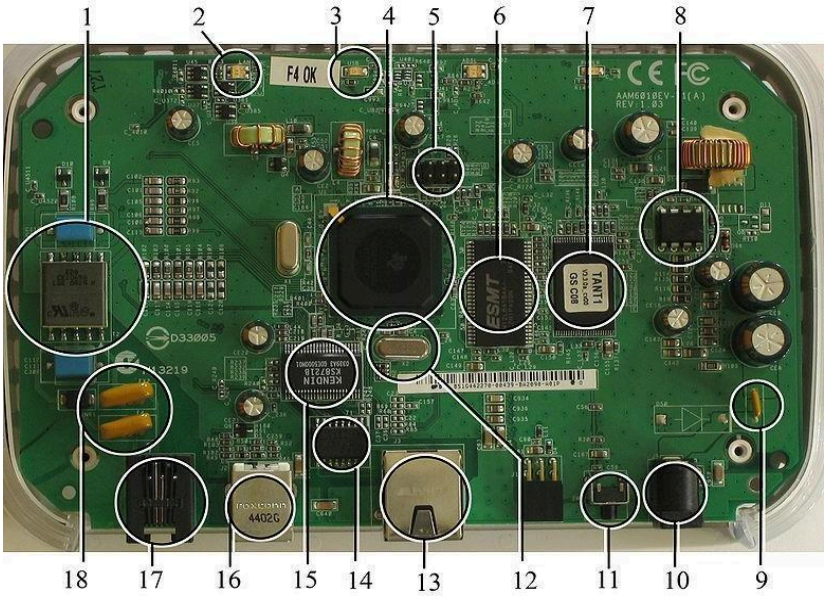

Fig 3: A modern example of embedded system

Labeled parts include microprocessor (4), RAM (6), flash memory (7). Embedded systems programming is not like normal PC programming. In many ways, programming for an embedded system is like programming PC 15 years ago. The hardware for the system is usually chosen to make the device as cheap as possible. Spending an extra dollar a unit in order to make things easier to program can cost millions. Hiring a programmer for an extra month is cheap in comparison. This means the programmer must make do with slow processors and low memory, while at the same time battling a need for efficiency not seen in most PC applications. There are several

different types of software architecture in common use.

Simple Control Loop:

In this design, the software simply has a loop. The loop calls subroutines, each of which manages a part of the hardware or software

Interrupt Controlled System:

Some embedded systems are predominantly interrupt controlled. This means that tasks performed by the system are triggered by different kinds of events. An interrupt could be generated for example by a timer in a predefined frequency, or by a serial port controller receiving a byte. These kinds of systems are used if event handlers need low latency and the event handlers are short and simple.

Cooperative Multitasking:

A non-preemptive multitasking system is very similar to the simple control loop scheme, except that the loop is hidden in an API. The programmer defines a series of tasks, and each task getsits own environment to “run” in. When a task is idle, it calls an idle routine, usually called “pause”, “wait”, “yield”, “nop” (stands for no operation), etc. The advantages and disadvantages are very similar to the control loop, except that adding new software is easier, by simply writing a new task, or adding to the queue-interpreter.

Primitive Multitasking:

In this type of system, a low-level piece of code switches between tasks or threads based on a timer (connected to an interrupt). This is the level at which the system is generally considered to have an "operating system" kernel. Depending on how much functionality is required, it introduces more or less of the complexities of managing multiple tasks running conceptually in parallel.

Microkernels And Exokernels:

A microkernel is a logical step up from a real-time OS. The usual arrangement is that the operating system kernel allocates memory and switches the CPU to different threads of execution. User mode processes implement major functions such as file systems, network interfaces, etc.

3.1 Need for Embedded systems

The uses of embedded systems are virtually limitless, because every day new products are introduced to the market that utilizes embedded computers in novel ways. In recent years, hardware such as microprocessors, microcontrollers, and FPGA chips have become much cheaper. So when implementing a new form of control, it's wiser to just buy the generic chip and write your own custom software for it. Producing a custom-made chip to handle a particular task

or set of

tasks costs far more time and money. Many embedded computers even come with extensive libraries, so that "writing your own software" becomes a very trivial task indeed. From an implementation viewpoint, there is a major difference between a computer and an embedded system. Embedded systems are often required to provide Real-Time response. The main elements that make embedded systems unique are its reliability and ease in debugging.

3.2 Real-time Embedded Systems:

Embedded systems which are used to perform a specific task or operation in a specific time period those systems are called as real-time embedded systems. There are two types of real-time embedded systems.

Hard Real-time Embedded Systems:

These embedded systems follow an absolute dead line time period i.e.., if the tasking is not done in a particular time period then there is a cause of damage to the entire equipment.

Eg: consider a system in which we have to open a valve within 30 milliseconds. If this valve is not opened in 30ms this may cause damage to the entire equipment. So in such cases we use embedded systems for doing automatic operations.

Soft Real Time Embedded Systems:

Eg: Consider a TV remote control system, if the remote control takes a few milliseconds delay it will not cause damage either to the TV or to the remote control. These systems which will not cause damage when they are not operated at considerable time period those systems comes under soft real-time embedded systems.

3.3Network Communication Embedded System

A wide range network interfacing communication is provided by using embedded system.

- Consider a web camera that is connected to the computer with internet can be used to spread communication like sending pictures, images, videos etc.., to another computer with internet connection throughout anywhere in the world.
- Consider a web camera that is connected at the door lock.

Whenever a person comes near the door, it captures the image of a person and sends to the desktop of your computer which is connected to internet. This gives an alerting message with image on to the desktop of your computer, and then you can open the door lock just by clicking the mouse. Fig: 3.3.1 show the network communications in embedded systems.

Fig 3.3.1: Network communication embedded systems

3.4 Industrial Automation

Today a lot of industries are using embedded systems for process control. In industries we design the embedded systems to perform a specific operation like monitoring temperature, pressure, humidity, voltage, current etc.., and basing on these monitored levels we do control other devices, we can send information to a centralized monitoring station.

Fig3.3.2: Robot

4. HARDWARE DESCRIPTION

4.1 Arduino Micro controller:

Circumstances that we find ourselves in today in the field of microcontrollers had their beginnings in the development of technology of integrated circuits. This development has made it possible to store hundreds of thousands of transistors into one chip. That was a prerequisite for production of microprocessors, and the first computers were made by adding external peripherals such as memory, input-output lines, timers and other. Further increasing of the volume of the package resulted in creation of integrated circuits. These integrated circuits contained both processor and peripherals. That is how the first chip containing a microcomputer, or what would later be known as a microcontroller came about.

Microprocessors and microcontrollers are widely used in embedded systems products. Microcontroller is a programmable device. A microcontroller has a CPU in addition to a fixed amount of RAM, ROM, I/O ports and a timer embedded all on a single chip. The fixed amount of on-chip ROM, RAM and number of I/O ports in microcontrollers makes them ideal for many applications in which cost and space are critical.

The AVR is a modified Harvard architecture 8-bit RISC single chip microcontroller which was developed by Atmel in 1996. The AVR was one of the first microcontroller families to use on-chip flash memory for program storage, as opposed to One-Time Programmable ROM, EPROM, or EEPROM used by other microcontrollers at the time.

Memory: It has 8Kb of Flash program memory (10,000 Write/Erase cycles durability), 512 Bytes of EEPROM (100,000 Write/Erase Cycles). 1Kbyte Internal SRAM I/O Ports: 23 I/ line can be obtained from three ports; namely Port B, Port C and Port D.

Interrupts: Two External Interrupt source, located at port D. 19 different interrupt vectors supporting 19 events generated by internal peripherals. Timer/Counter: Three Internal Timers are available, two 8 bit, one 16 bit, offering various operating modes and supporting internal or external clocking.

SPI (Serial Peripheral interface): ATmega8 holds three communication devices integrated. One of them is Serial Peripheral Interface. Four pins are assigned to Atmega8 to implement this scheme of communication

USART: One of the most powerful communication solutions is USART and ATmega8 supports both synchronous and asynchronous data transfer schemes. It has three pins assigned for that. In many projects, this module is extensively used for PC-Micro controller communication.

TWI (Two Wire Interface): Another communication device that is present in ATmega8 is Two Wire Interface. It allows designers to set up a commutation between two devices using just two wires along with a common ground connection, As the TWI output is made by means of open collector outputs, thus external pull up resistors are required to make the circuit.

Analog Comparator: A comparator module is integrated in the IC that provides comparison facility between two voltages connected to the two inputs of the Analog comparator via External pins attached to the micro controller.

Analog to Digital Converter: Inbuilt analog to digital converter can convert an analog input signal into digital data of 10bit resolution. For most of the low end application, this much resolution is enough

Crystal Oscillator:

XTAL1 and XTAL2 are input and output, respectively, of an inverting amplifier which can be configured for use as an On-chip Oscillator, Either a quartz

Crystal or a ceramic resonator may be used. The CKOPT Fuse selects between two different Oscillator amplifier modes. When CKOPT is programmed, the Oscillator output will oscillate a full rail-to-rail swing on the output. This mode is suitable when operating in a very noisy environment or when the output from XTAL2 drives a second clock buffer. This mode has a wide frequency range. When CKOPT is unprogrammed, the Oscillator has a smaller output swing. This reduces power consumption considerably.

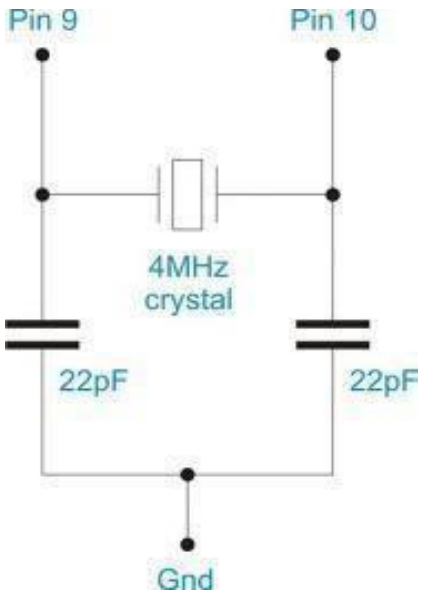

Fig 4.1.1 Crystal Oscillator

This mode has a limited frequency range and it cannot be used to drive other clock buffers. For resonators, the maximum frequency is 8 MHz with CKOPT unprogrammed and 16 MHz with CKOPT programmed. C1 and C2 should always be equal for both crystals and resonators. The optimal value of the capacitors depends on the crystal or resonator in use, the amount of stray capacitance, and the electromagnetic noise of the environment. For ceramic resonators, the capacitor values given by the manufacturer should be used. The Oscillator can operate in three different modes, each optimized for a specific frequency range. The operating mode is selected by the fuses CKSEL

4.2 IOT ESP8266 Module

ESP8266 offers a complete and self-contained Wi-Fi networking solution, allowing it to either host the application or to offload all Wi-Fi networking functions from another application processor.

When ESP8266 hosts the application, and when it is the only application processor in the device, it is able to boot up directly from an external flash. It has integrated cache to improve the performance of the system in such applications, and to minimize the memory requirements.

Alternately, serving as a Wi-Fi adapter, wireless internet access can be added to any microcontroller-based design with simple connectivity through UART interface or the CPU AHB bridge interface.

ESP8266 on-board processing and storage capabilities allow it to be integrated with the sensors and other application specific devices through its GPIOs with minimal development up-front and minimal loading during runtime. With its high degree of on-chip integration, which includes the antenna switch balun, power management converters, it requires minimal external circuitry, and the entire solution, including front-end module, is designed to occupy minimal PCB area.

Sophisticated system-level features include fast sleep/wake context switching for energy-efficient VoIP, adaptive radio biasing for low-power operation, advance signal processing, and spur cancellation and radio co-existence features for common cellular, Bluetooth, DDR, LVDS, LCD interference mitigation.

Features

- 802.11 b/g/n protocol
- Wi-Fi Direct (P2P), soft-AP
- Integrated TCP/IP protocol stack
- Integrated TR switch, balun, LNA, power amplifier and matching network

- Integrated PLL, regulators, and power management units
- +19.5dBm output power in 802.11b mode
- Integrated temperature sensor
- Supports antenna diversity
- Power down leakage current of < 10uA
- Integrated low power 32-bit CPU could be used as application processor
- SDIO 2.0, SPI, UART
- STBC, 1×1 MIMO, 2×1 MIMO
- A-MPDU & A-MSDU aggregation & 0.4s guard interval
- Wake up and transmit packets in < 2ms
- Standby power consumption of < 1.0mW (DTIM3)

ESP8266 Applications

- Smart power plugs
- Home automation
- Mesh network
- Industrial wireless control
- Baby monitors
- IP Cameras
- Sensor networks
- Wearable electronics
- Wi-Fi location-aware devices
- Security ID tags
- Wi-Fi position system beacons

4.3 Regulated Power Supply

Power supply is a supply of electrical power. A device or system that supplies electrical or other types of energy to an output load or group of loads is called a power supply unit or PSU. The term is most commonly applied to electrical energy supplies, less often to mechanical ones, and rarely to others.

A power supply may include a power distribution system as well as primary or secondary sources of energy such as

- Conversion of one form of electrical power to another desired form and voltage, typically involving converting AC line voltage to a well-regulated lower-voltage DC for electronic devices. Low voltage, low power DC power supply units are commonly integrated with the devices they supply, such as computers and household electronics.
- Batteries.
- Chemical fuel cells and other forms of energy storage systems.
- Solar power.
- Generators or alternators.

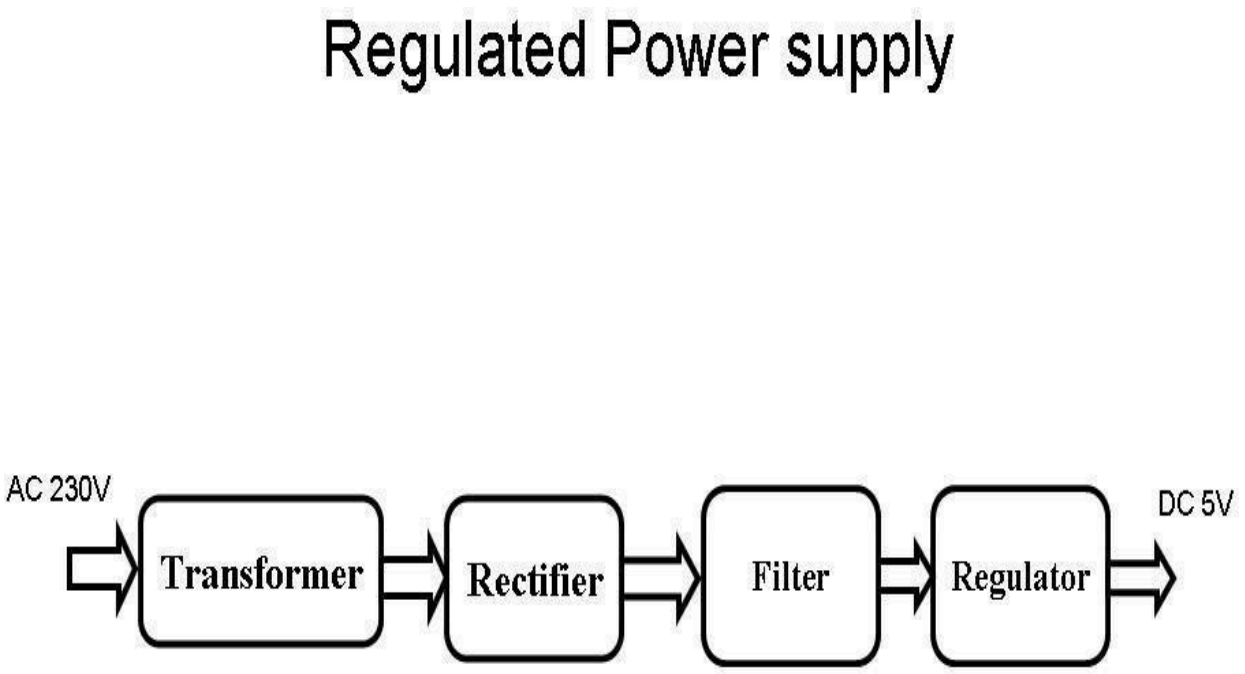

Fig 4.3.1 Regulated Power Supply

The basic circuit diagram of a regulated power supply (DC O/P) with led connected as load is shown in fig: 3.3.3.

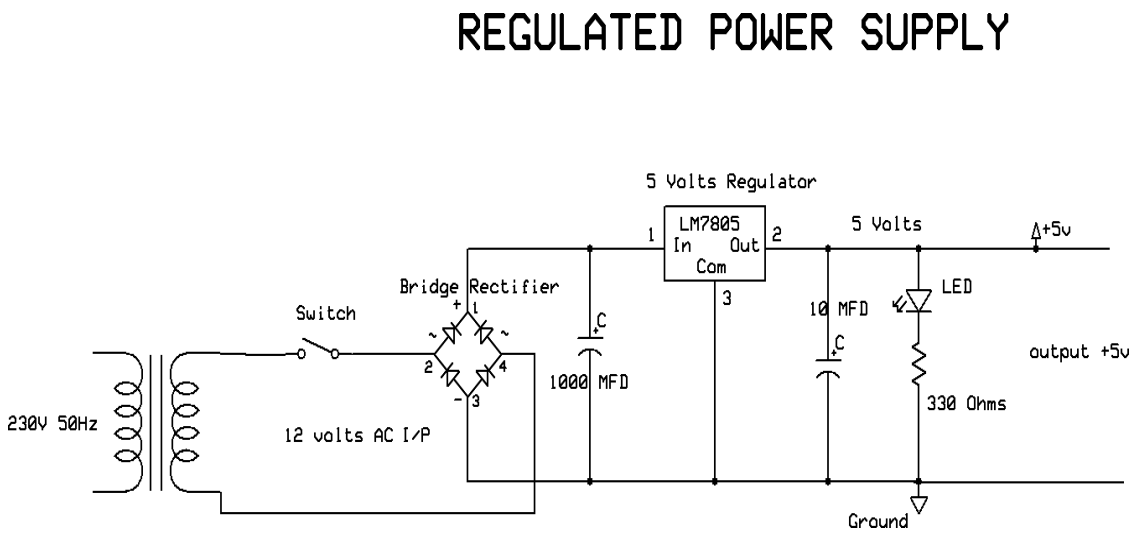

Fig 4.3.2 Circuit diagram of Regulated Power Supply with Led connection

The components mainly used in above figure are

- 230V AC Mains
- Transformer
- Bridge Rectifier(Diodes)
- Capacitor
- Voltage Regulator (IC 7805)
- Resistor
- LED(Light Emitting Diode)

The detailed explanation of each and every component mentioned above is as follows

4.4 LED

A light-emitting diode (LED) is a semiconductor light source. LED's are used as indicator lamps in many devices, and are increasingly used for lighting. Introduced as a practical electronic component in 1962, early LED's emitted low-intensity red light, but modern versions are available across the visible, ultraviolet and infrared wavelengths, with very high brightness. The internal structure and parts of a led are shown in figures 4 .4.1 and 4.4.2 respectively.

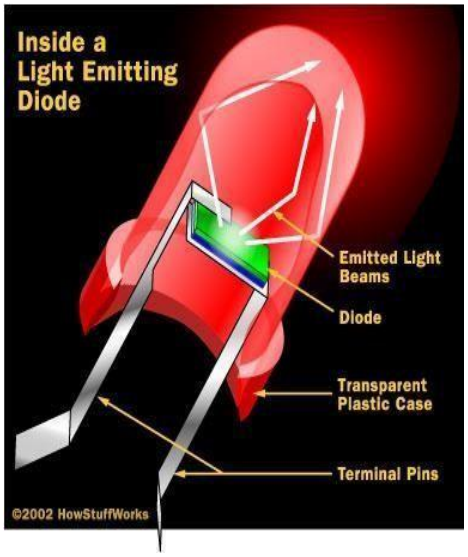

Fig 4.4.1: Inside a LED

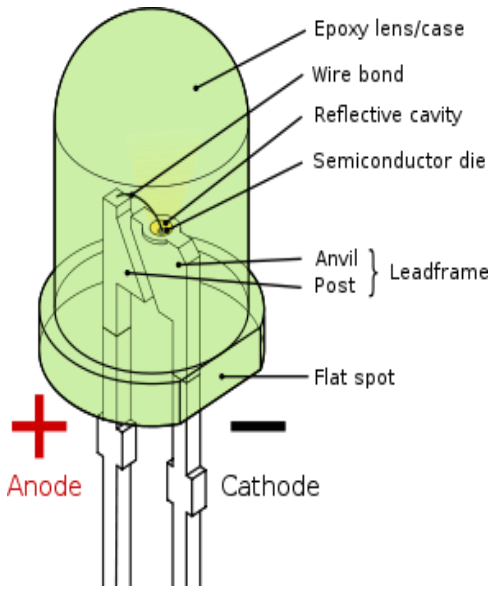

Fig 4.4.2: Parts of a LED

Working:

The structure of the LED light is completely different than that of the light bulb amazingly, the LED has a simple and strong structure. The light-emitting semiconductor material is what determines the LED's color. The LED is based on the semiconductor diode.

When a diode is forward biased (switched on), electrons are able to recombine with holes within the device, releasing energy in the form of photons. This effect is called electroluminescence and the color of the light (corresponding to the energy of the photon) is determined by the energy gap of the semiconductor. An LED is usually small in area (less than 1 mm^2), and integrated optical components are used to shape its radiation pattern and assist in reflection. LED's present many advantages over incandescent light sources including lower energy consumption, longer lifetime, improved robustness, smaller size, faster switching, and greater durability and reliability. However, they are relatively expensive and require more precise current and heat management than traditional light sources. Current LED products for general lighting are more expensive to buy than fluorescent lamp sources of comparable output. They also enjoy use in applications as diverse as replacements for traditional light sources in automotive lighting (particularly indicators) and in traffic signals. The compact size of LED's has allowed new text and video displays and sensors to be developed, while their high switching rates are useful in advanced communications technology. The electrical symbol and polarities of led are shown in fig: 4.4.3.

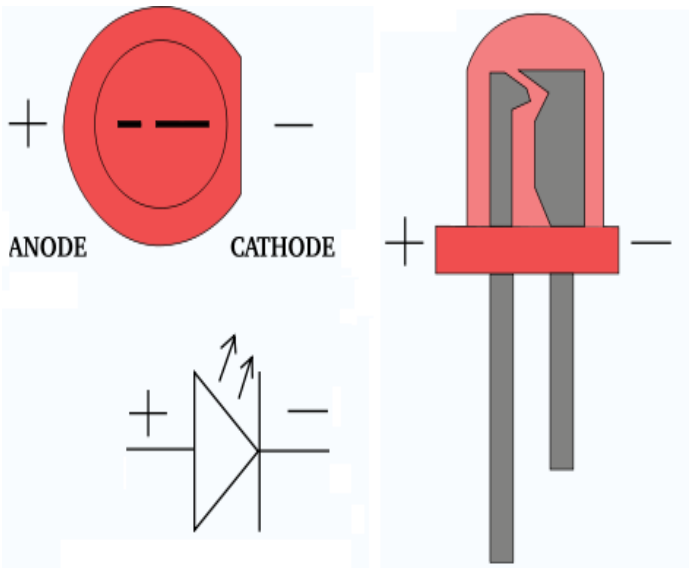

Fig 4.4.3: Electrical Symbol & Polarities of LED

LED lights have a variety of advantages over other light sources:

- High-levels of brightness and intensity
- High-efficiency
- Low-voltage and current requirements
- Low radiated heat
- High reliability (resistant to shock and vibration)
- No UV Rays
- Long source life
- Can be easily controlled and programmed

Applications of LED fall into three major categories:

- Visual signal application where the light goes more or less directly from the LED to the human eye, to convey a message or meaning.
- Illumination where LED light is reflected from object to give visual response of these objects.
- Generate light for measuring and interacting with processes that do not involve the human visual system.
- The compact size of LED's has allowed new text and video displays and sensors to be developed, while their high switching rates are useful in advanced communications technology.

4.5 Mercury switch

Vibration TILT sensor

A mercury switch is an electrical switch that opens and closes a circuit when a small amount of the liquid metal mercury connects metal electrodes to close the circuit. There are several different basic designs (tilt, displacement, radial, etc.) but they all share the common design strength of non-eroding switch contacts.

Fig 4.5.1 TILT Sensor

The most common is the mercury tilt switch. It is in one state (open or closed) when tilted one direction with respect to horizontal, and the other state when tilted the other direction. This is what older style thermostats used to turn a heater or air conditioner on or off.

The mercury displacement switch uses a 'plunger' that dips into a pool of mercury, raising the level in the container to contact at least one electrode. This design is used in relays in industrial applications that need to switch high current loads frequently. These relays use electromagnetic coils to pull steel sleeves inside hermetically sealed containers.

Fig 4.5.2 Plunger

Description:

Mercury switches have one or more sets of electrical contacts in a sealed glass envelope that contains a small quantity of mercury. The envelope may also contain air, an inert gas, or a vacuum. Gravity constantly pulls the drop of mercury to the lowest point in the envelope. When the switch

is tilted in the appropriate direction, the mercury touches a set of contacts, thus completing an electrical circuit. Tilting the switch in the opposite direction moves the mercury away from that set of contacts, breaking that circuit.[1] The switch may contain multiple sets of contacts, closing different sets at different angles, allowing, for example, single-pole, double-throw (*SPDT*) operation.

Advantages

Mercury switches offer several advantages over other switch types:

- The contacts are enclosed, so oxidation of the contact points is unlikely.
- In hazardous locations, interrupting the circuit does not emit a spark that could ignite flammable gases.
- Sensitivity of the drop to gravity provides a unique sensing function, and lends itself to simple, low-force mechanisms for manual or automatic operation.
- The switches are quiet, as no contacts abruptly snap together.
- The mass of the moving mercury drop provides an over center effect to avoid chattering as the switch tilts.

The envelope can include contacts for two or more circuits.

4.6 LCD Display

LCD Background:

One of the most common devices attached to a micro controller is an LCD display. Some of the most common LCD's connected to the many microcontrollers are 16x2 and 20x2 displays. This means 16characters per line by 2 lines and 20 characters per line by 2 lines, respectively. The LCD panel's Enable and Register Select is connected to the Control Port. The Control Port is an open collector

/open drain output. Therefore by incorporating the two 10K external pull up resistors, the circuit is more portable for a wider range of computers, some of which may have no internal pull up resistors. The LCD requires 3 control lines as well as either 4 or 8 I/O lines for the data bus. The user may select whether the LCD is to operate with a 4-bit data bus or an 8-bit data bus. If a 4-bit data bus is used the LCD will require a total of 7 data lines.

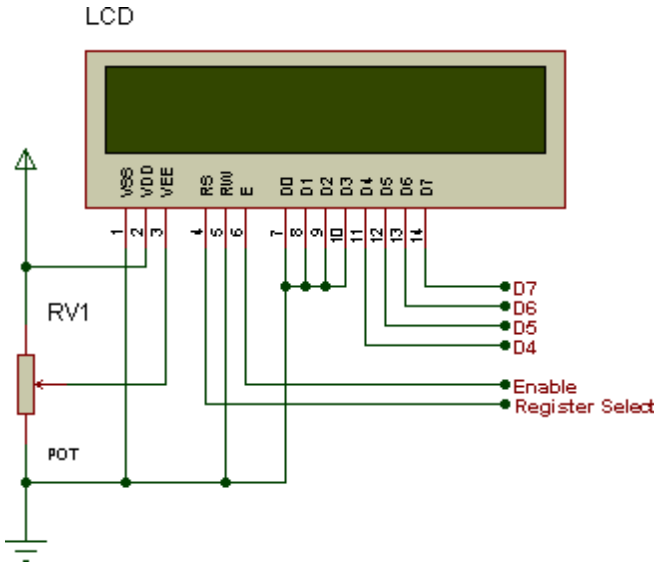

Figure 4.6.1: LCD Pin diagram

Pin Description:

Pin No.	**Name**	**Description**
Pin no. 1	**VSS**	Power supply (GND)
Pin no. 2	**VCC**	Power supply (+5V)
Pin no. 3	**VEE**	Contrast adjust
Pin no. 4	**RS**	0= Instruction input 1 = Data input
Pin no. 5	**R/W**	0 = Write to LCD module 1 = Read from LCD module
Pin no. 6	**EN**	Enable signal
Pin no. 7	**D0**	Data bus line 0 (LSB)
Pin no. 8	**D1**	Data bus line 1
Pin no. 9	**D2**	Data bus line 2
Pin no. 10	**D3**	Data bus line 3
Pin no. 11	**D4**	Data bus line 4
Pin no. 12	**D5**	Data bus line 5
Pin no. 13	**D6**	Data bus line 6
Pin no. 14	**D7**	Data bus line 7 (MSB)

Table : 4.6.2 Character LCD pins with Microcontroller

The LCD requires 3 control lines as well as either 4 or 8 I/O lines for the data bus. The user may select whether the LCD is to operate with a 4-bit data bus or an 8-bit data bus. If a 4-bit data bus is used the LCD will require a total of 7 data lines (3 control lines plus the 4 lines for the data bus). If an8-bit data bus is used the LCD will require a total of 11 data lines (3 control lines plus the 8 lines for the data bus).

The three control lines are referred to as **EN**, **RS**, and **RW**.

The **EN** line is called "Enable." This control line is used to tell the LCD that we are sending it data. To send data to the LCD, our program should make sure this line is low (0) and then set the other two control lines and/or put data on the data bus. When the other lines are completely ready, bring **EN** high(1) and wait for the minimum amount of time required by the LCD datasheet (this varies from LCD to LCD), and end by bringing it low (0) again.

The **RS** line is the "Register Select" line. When RS is low (0), the data is to be treated as a command or special instruction (such as clear screen, position cursor, etc.). When RS is high (1), the data being sent is text data which should be displayed on the screen. For example, to display the letter "T" on the screen we would set RS high.

The **RW** line is the "Read/Write" control line. When RW is low (0), the information on the data bus is being written to the LCD. When RW is high (1), the program is effectively querying (or reading) the LCD. Only one instruction ("Get LCD status") is a read command. All others are write commands--so RW will almost always be low.

Finally, the data bus consists of 4 or 8 lines (depending on the mode of operation selected by the user). In the case of an 8-bit data bus, the lines are referred to as DB0, DB1, DB2, DB3, DB4,DB5, DB6, and DB7.

4.7 Buzzer

Basically, the sound source of a piezoelectric sound component is a piezoelectric diaphragm. A piezoelectric diaphragm consists of a piezoelectric ceramic plate which has electrodes on both sides and a metal plate (brass or stainless steel, etc.). A piezoelectric ceramic plate is attached to a metal plate with adhesives. Applying D.C. voltage between electrodes of a piezoelectric diaphragm causes mechanical distortion due to the piezoelectric effect. For a misshaped piezoelectric element, the distortion of the piezoelectric element expands in a radial direction. And the piezoelectric diaphragm bends toward the direction. The metal plate bonded to the piezoelectric element does not expand. Conversely, when the piezoelectric element shrinks, the piezoelectric diaphragm bends in the direction. Thus, when AC voltage is applied across electrodes, the bending is repeated, producing sound waves in the air.

To interface a buzzer the standard transistor interfacing circuit is used. Note that if a different power supply is used for the buzzer, the 0V rails of each power supply must be connected to provide a common reference. If a battery is used as the power supply, it is worth remembering that piezo sounders draw much less current than buzzers. Buzzers also just have one 'tone', whereas a piezo sounder is able to create sounds of many different tones.

To switch on buzzer -high 1, To switch off buzzer -low 1

Notice (Handling) In Using Self Drive Method

1) When the piezoelectric buzzer is set to produce intermittent sounds, sound may be heard continuously even when the self drive circuit is turned ON / OFF at the "X" point shown in Fig.
   4.7.1 This is because of the failure of turning off the feedback voltage.
2) Build a circuit of the piezoelectric sounder exactly as per the recommended circuit shown in the catalog of the transistor and circuit constants are designed to ensure stable oscillation of the piezoelectric sounder.
3) Design switching which ensures direct power switching.
4) The self drive circuit is already contained in the piezoelectric buzzer. So there is no need to prepare another circuit to drive the piezoelectric buzzer.
5) Rated voltage (3.0 to 20Vdc) must be maintained. Products which can operate with voltage higher than 20Vdc are also available.
6) Do not place resistors in series with the power source, as this may cause abnormal oscillation. If a resistor is essential to adjust sound pressure, place a capacitor (about 1μF) in parallel with the piezo buzzer.
7) Do not close the sound emitting hole on the front side of casing.
8) Carefully install the piezo buzzer so that no obstacle is placed within 15mm from the sound release hole on the front side of the casing.

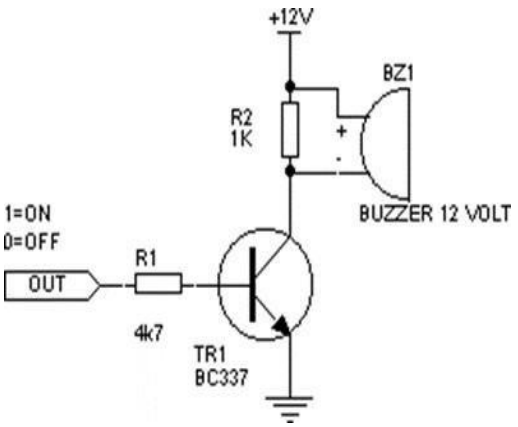

4.7.1 Buzzer Circuit

5. SOFTWARE DESIGN

This project is implemented using following software's:

- Express PCB – for designing circuit
- Arduino IDE compiler - for compilation part
- Proteus 7 (Embedded C) – for simulation part

5.1 Express PCB:

Breadboards are great for prototyping equipment as it allows great flexibility to modify a design when needed; however the final product of a project, ideally should have a neat PCB, few cables, and survive a shake test. Not only is a proper PCB neater but it is also more durable as there are no cables which can yank loose.

Express PCB is a software tool to design PCBs specifically for manufacture by the company Express PCB (no other PCB maker accepts Express PCB files). It is very easy to use, but it does have several limitations.

- It can be likened to more of a toy then a professional CAD program.
- It has a poor part library (which we can work around)
- It cannot import or export files in different formats
- It cannot be used to make prepare boards for DIY production

Express PCB has been used to design many PCBs (some layered and with surface-mount parts. Print out PCB patterns and use the toner transfer method with an Etch Resistant Pen to make boards. However, Express PCB does not have a nice print layout. Here is the procedure to design in Express PCB and clean up the patterns so they print nicely.

Express PCB comes with a less then exciting list of parts. So before any project is started head over to Audio logical and grab the additional parts by morsel, ppl, and tangent, and extract them into your Express PCB directory. At this point start the program and get ready to setup the workspace to suit your style.

Click View -> Options. In this menu, setup the units for "mm" or "in" depending on how you think, and click "see through the top copper layer" at the bottom. The standard color scheme of red and green is generally used but it is not as pleasing as red and blue. When a project is first started you will be greeted with a yellow outline. This yellow outline is the dimension of the PCB. Typically after positioning of parts and traces, move them to their final position and then crop the PCB to the correct size.

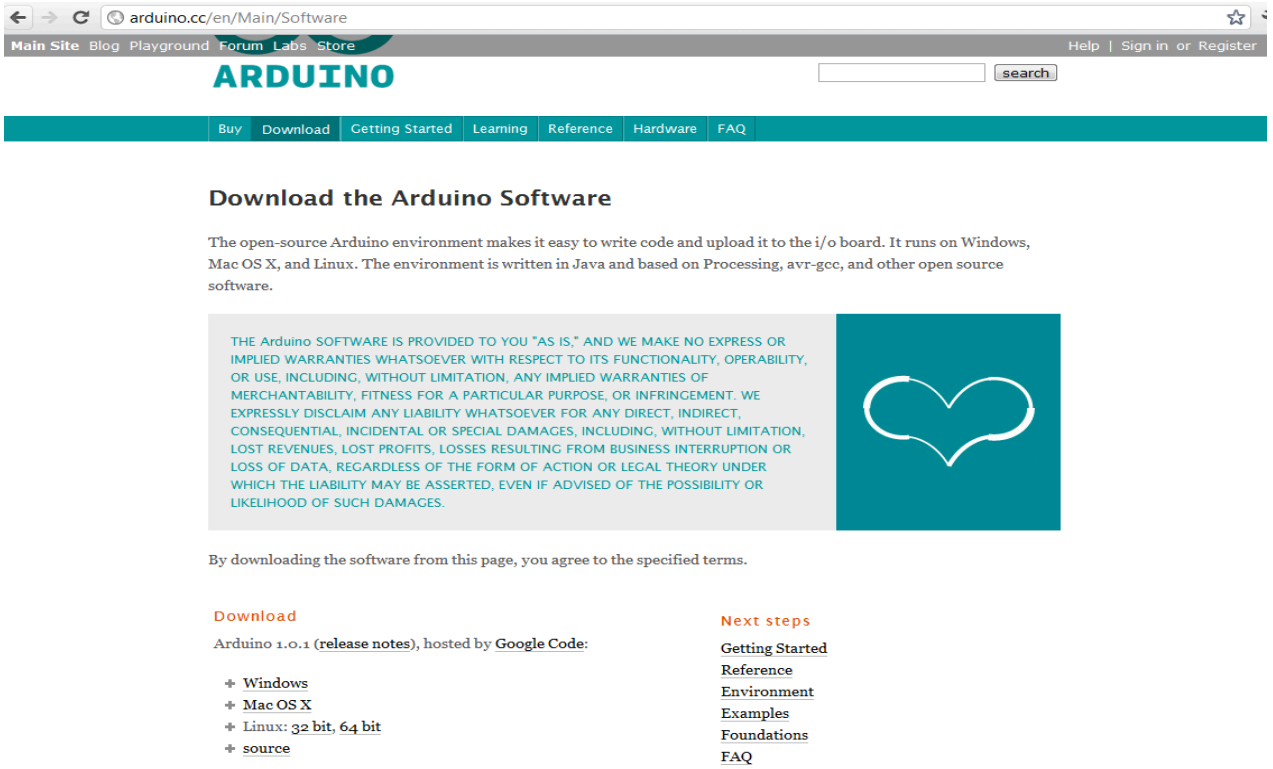

In next step download library

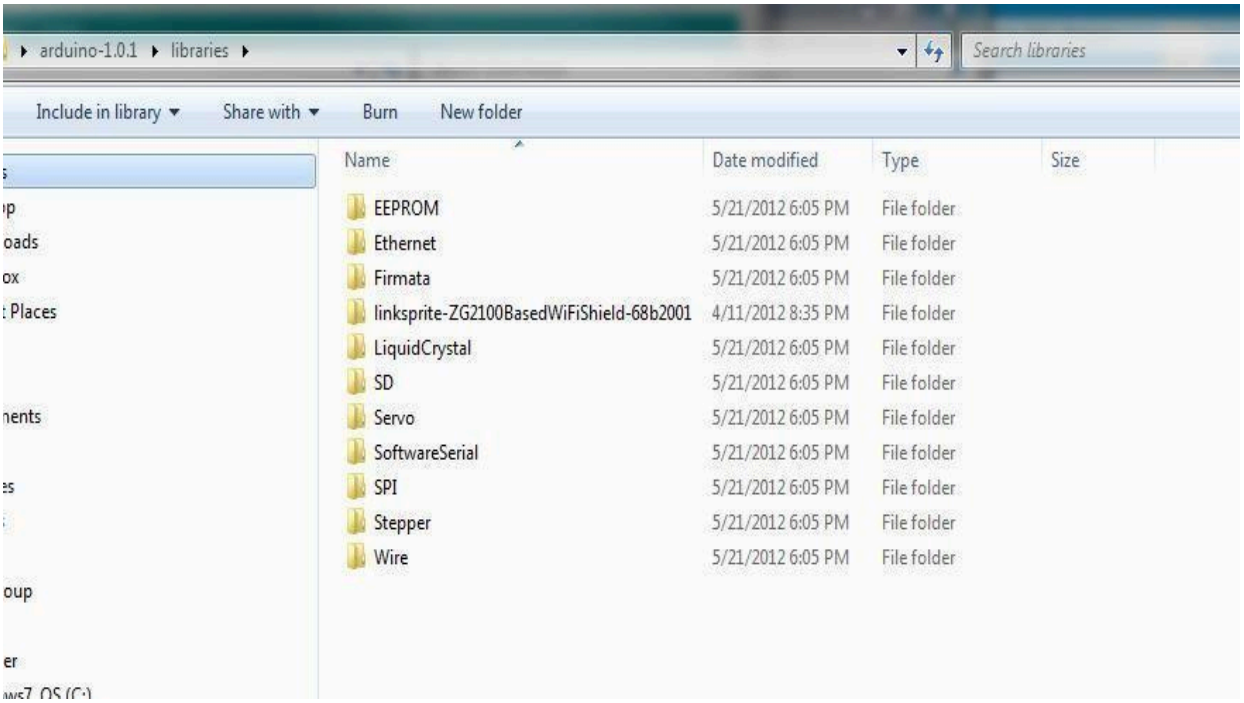

As Arduino doesn't recognize the directory name, please rename it

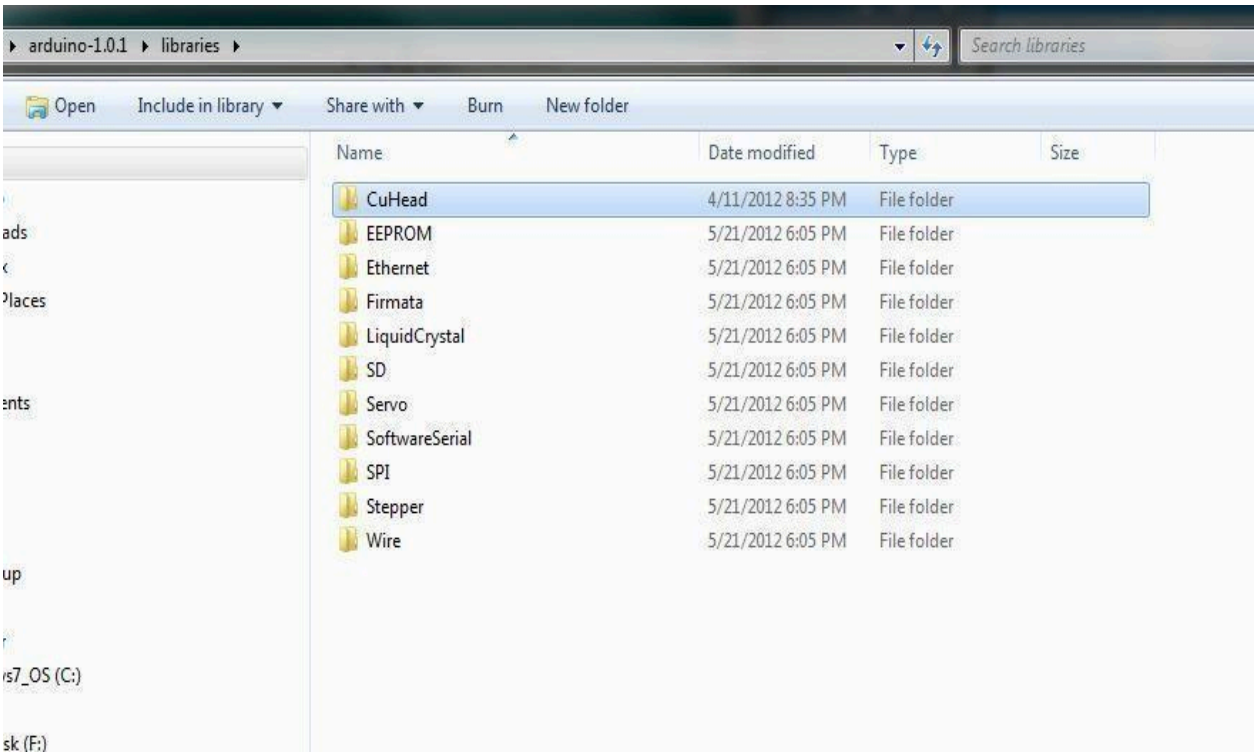

Launch Arduino by double click "arduino" below

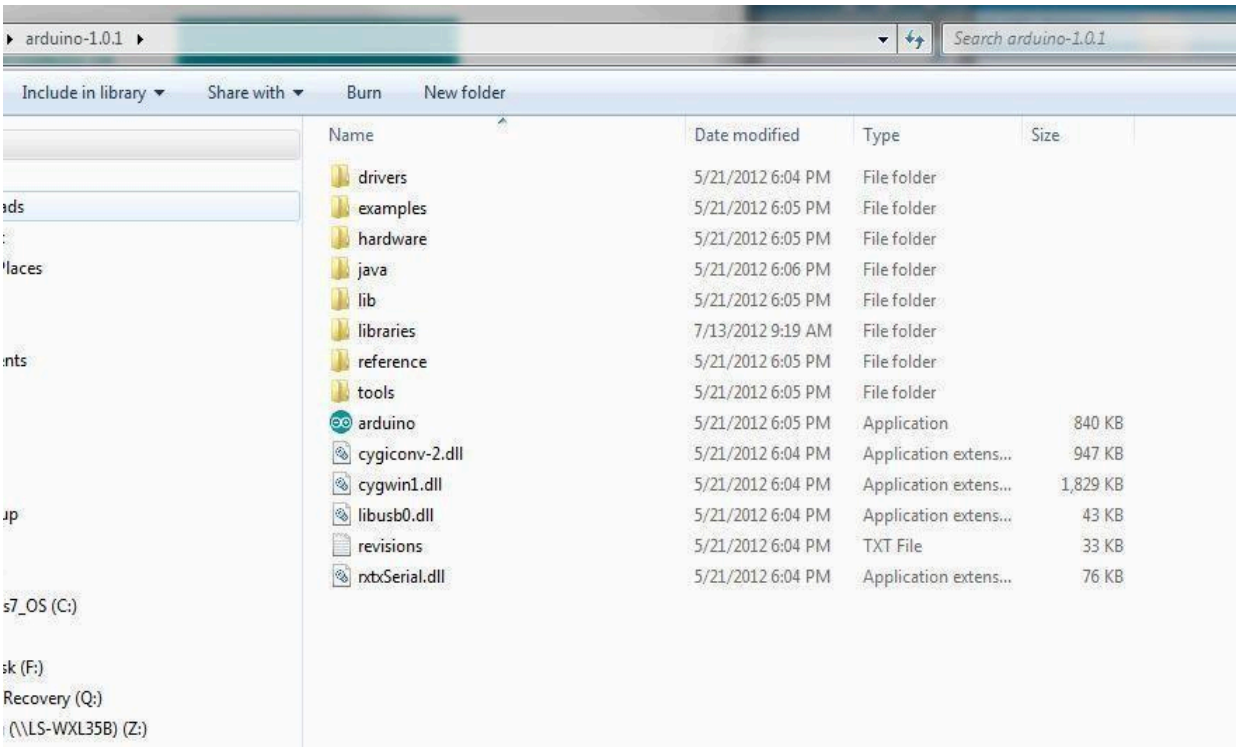

One example

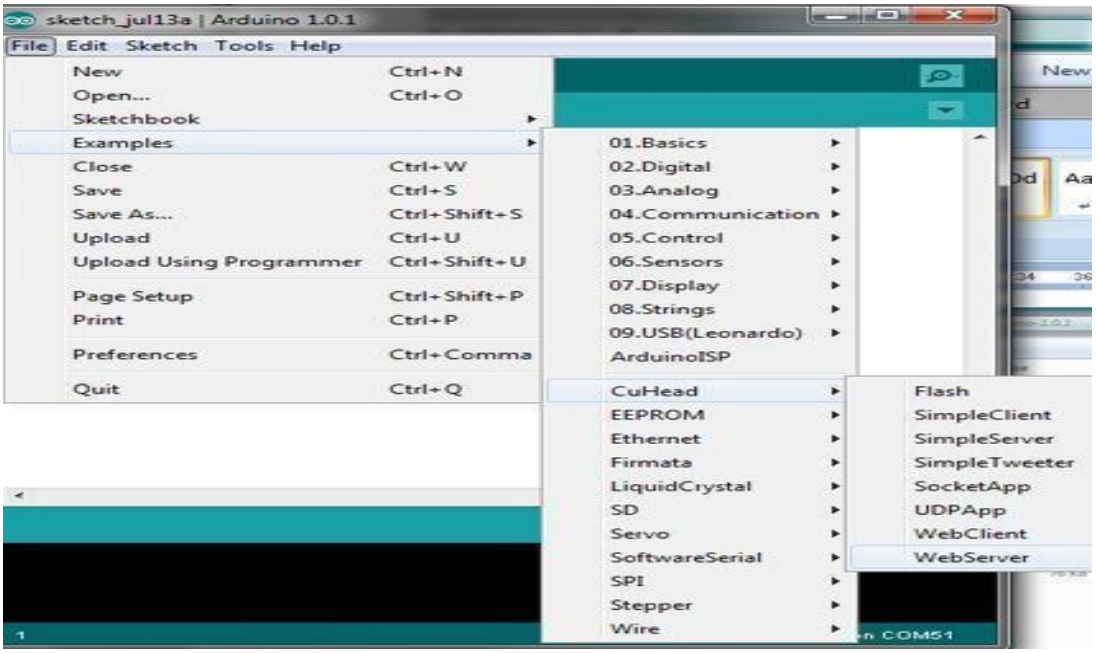

Select the target board as “Arduino Uno”:

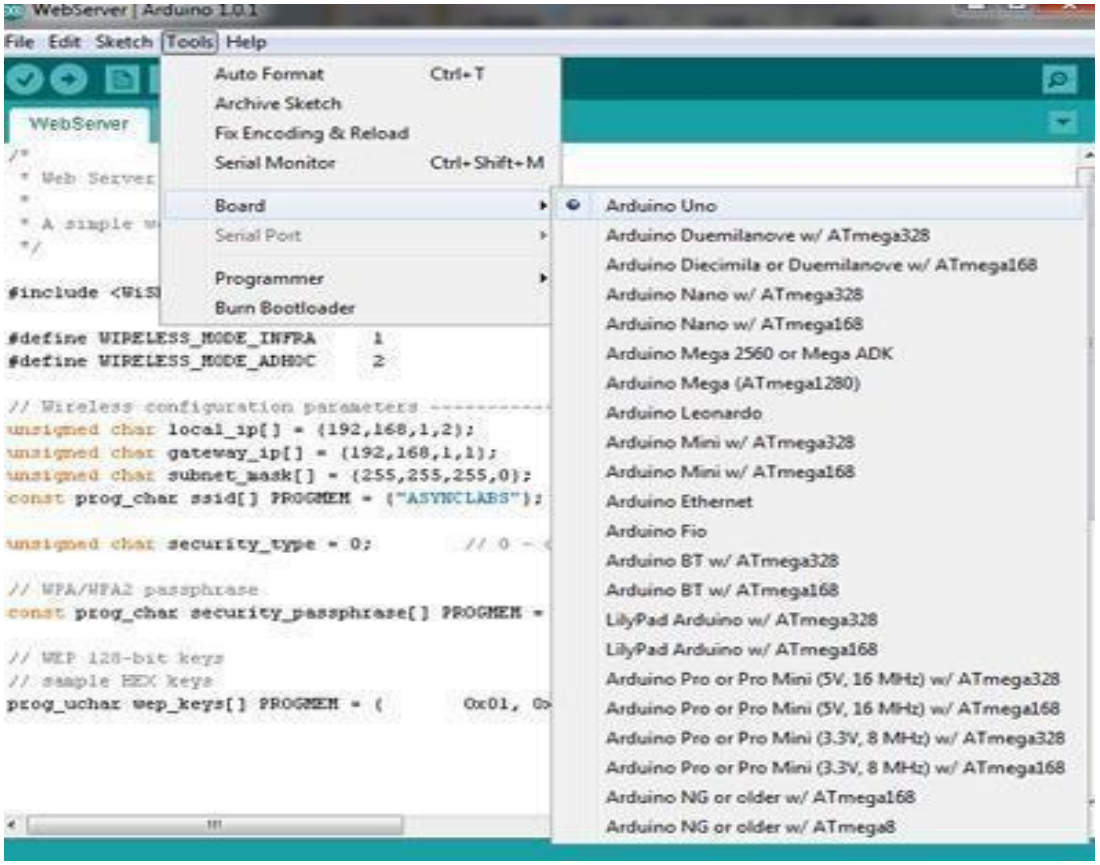

Select the target board as “Arduino Uno”:

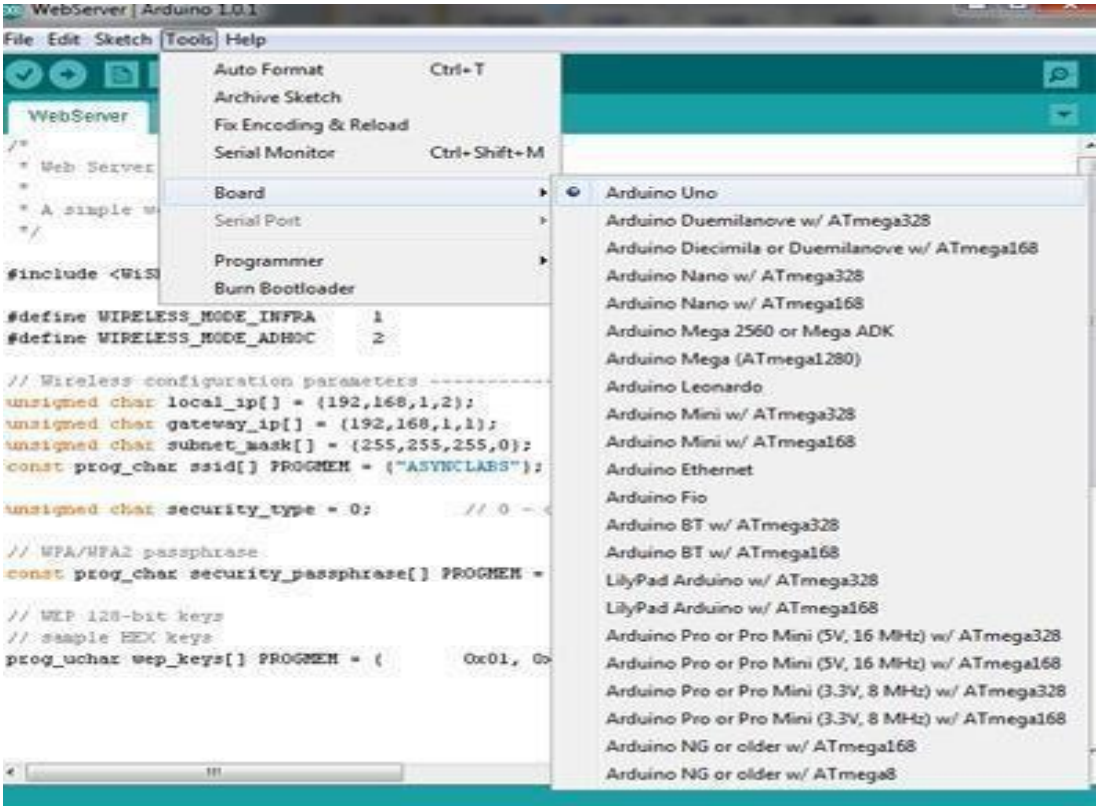

Click Sketch-> Verify/Compile:

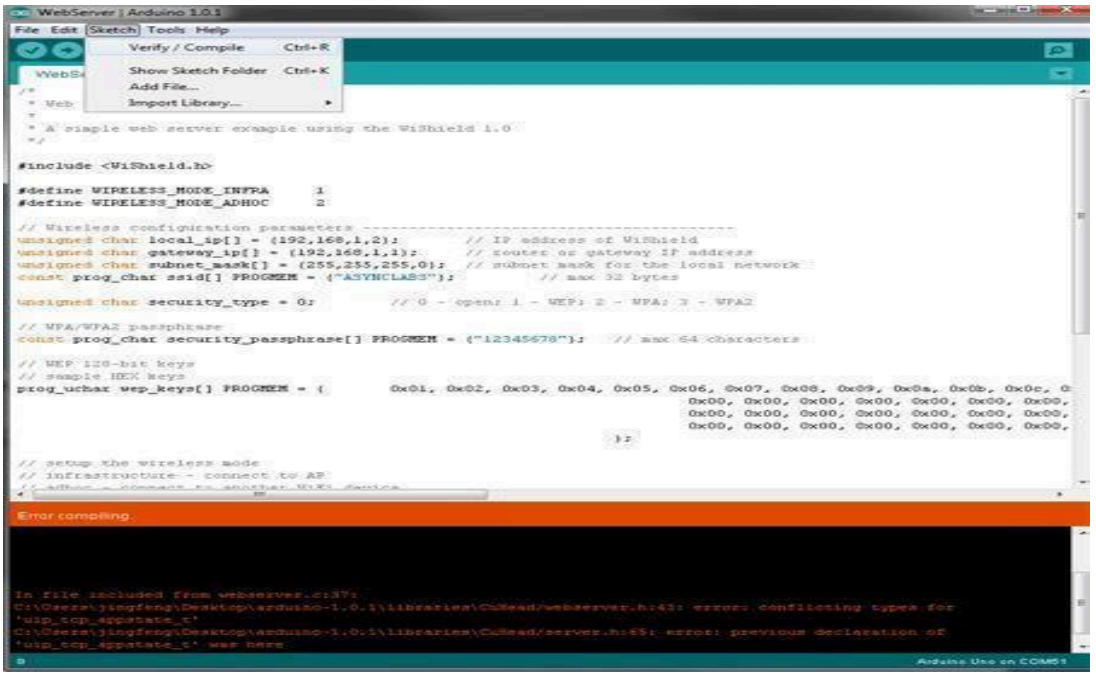

5.2 SYSTEM ARCHITECTURE

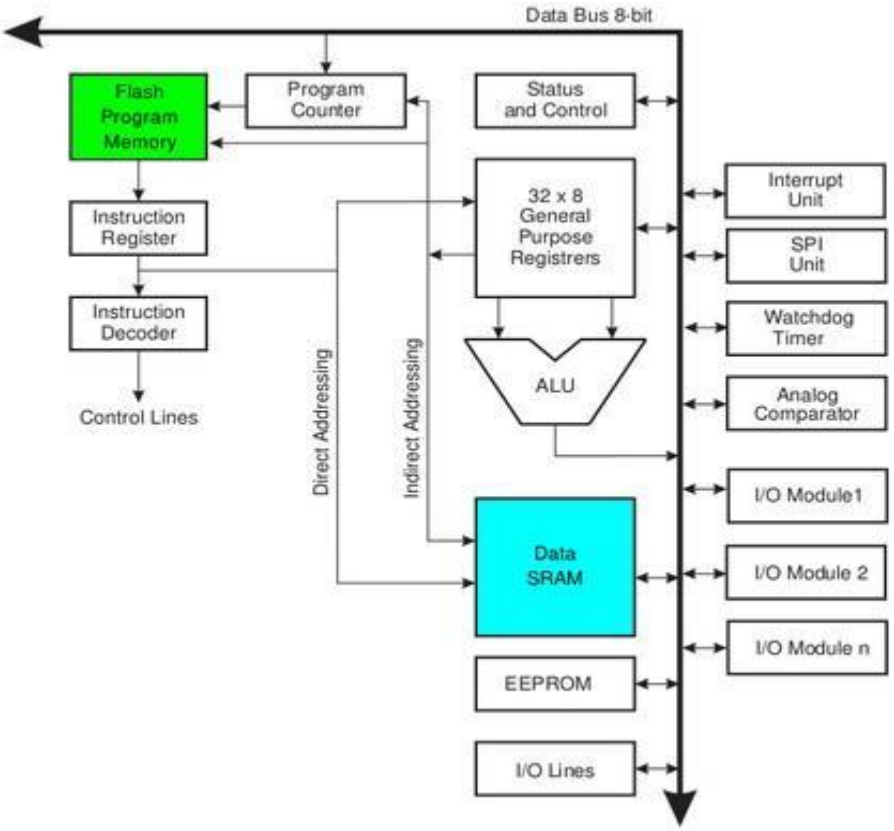

5.2.1 System Architecture

Device Architecture

Flash, EEPROM, and SRAM are all integrated onto a single chip, removing the need for external memory in most applications. Some devices have a parallel external bus option to allow adding additional data memory or memory-mapped devices. Almost all devices (except the smallest TinyAVR chips) have serial interfaces, which can be used to connect larger serial EEPROMs or flash chips.

Program Memory

Program instructions are stored in non-volatile flash memory. Although the MCUs are 8-bit, each instruction takes one or two 16-bit words.

The size of the program memory is usually indicated in the naming of the device itself (e.g., the ATmega64x line has 64 kB of flash while the ATmega32x line has 32 kB). There is no provision for off-chip program memory; all code executed by the AVR core must reside in the on-chip flash. However, this limitation does not apply to the AT94 FPSLIC AVR/FPGA chips.

Internal Data Memory

The data address space consists of the register file, I/O registers, and SRAM.

Internal Registers

The AVRs have 32 single-byte registers and are classified as 8-bit RISC devices.

In most variants of the AVR architecture, the working registers are mapped in as the first 32 memory addresses (0000_{16}–$001F_{16}$) followed by the 64 I/O registers (0020_{16}–$005F_{16}$).

Actual SRAM starts after these register sections (address 0060_{16}). (Note that the I/O register space may be larger on some more extensive devices, in which case the memory mapped I/O registers will occupy a portion of the SRAM address space.)

Even though there are separate addressing schemes and optimized opcodes for register file and I/O register access, all can still be addressed and manipulated as if they were in SRAM.

In the XMEGA variant, the working register file is not mapped into the data address space; as such, it is not possible to treat any of the XMEGA's working registers as though they were SRAM. Instead, the I/O registers are mapped into the data address space starting at the very beginning of the address space. Additionally, the amount of data address space dedicated to I/O registers has grown substantially to 4096 bytes (0000_{16}–$0FFF_{16}$). As with previous generations, however, the fast I/O manipulation instructions can only reach the first 64 I/O register locations (the first 32 locations for bitwise instructions). Following the I/O registers, the XMEGA series sets aside a 4096 byte range of the data address space which can be used optionally for mapping the internal EEPROM to the data address space (1000_{16}–$1FFF_{16}$). The actual SRAM is located after these ranges, starting at 2000_{16}.

EEPROM

Almost all AVR microcontrollers have internal EEPROM for semi-permanent data storage. Like flash memory, EEPROM can maintain its contents when electrical power is removed.

In most variants of the AVR architecture, this internal EEPROM memory is not mapped into the MCU's addressable memory space. It can only be accessed the same way an external peripheral device is, using special pointer registers and read/write instructions which makes EEPROM access much slower than other internal RAM.

However, some devices in the Secure AVR (AT90SC) family use a special EEPROM mapping to the data or program memory depending on the configuration. The XMEGA family also allows the EEPROM to be mapped into the data address space.

Since the number of writes to EEPROM is not unlimited Atmel specifies 100,000 write cycles in their datasheets a well designed EEPROM write routine should compare the contents of an EEPROM address with desired contents and only perform an actual write if the contents need to be changed.

Note that erase and write can be performed separately in many cases, byte-by-byte, which may also help prolong life when bits only need to be set to all 1s (erase) or selectively cleared to 0s (write).

Program Execution

Atmel's AVRs have a two stage, single level pipeline design. This means the next machine instruction is fetched as the current one is executing. Most instructions take just one or two clock cycles, making AVRs relatively fast among eight-bit microcontrollers.

The AVR processors were designed with the efficient execution of compiled C code in mind and have several built-in pointers for the task.

MCU Speed

The AVR line can normally support clock speeds from 0 to 20 MHz, with some devices reaching 32 MHz. Lower powered operation usually requires a reduced clock speed. All recent (Tiny, Mega, and Xmega, but not 90S) AVRs feature an on-chip oscillator, removing the need for external clocks or resonator circuitry. Some AVRs also have a system clock prescaler that can divide down the system clock by up to 1024. This prescaler can be reconfigured by software during run-time, allowing the clock speed to be optimized.

Since all operations (excluding literals) on registers R0 - R31 are single cycle, the AVR can achieve up to 1 MIPS per MHz, i.e. an 8 MHz processor can achieve up to 8 MIPS. Loads and stores to/from memory take two cycles, branching takes two cycles. Branches in the latest "3-byte PC" parts such as ATmega2560 are one cycle slower than on previous devices

Features:

• High-performance, Low-power Atmel®AVR® 8-bit Microcontroller

• Advanced RISC Architecture

– 130 Powerful Instructions – Most Single-clock Cycle Execution
– 32 × 8 General Purpose Working Registers
– Fully Static Operation
– Up to 16MIPS Throughput at 16MHz

• **High Endurance Non-volatile Memory Segments**

– 8Kbytes of In-System Self-programmable Flash program memory
– 512Bytes EEPROM
– 1Kbyte Internal SRAM
– Write/Erase Cycles: 10,000 Flash/100,000 EEPROM
– Data retention: 20 years at 85°C/100 years at 25°C(1)
– Optional Boot Code Section with Independent Lock
Bits In-System Programming by On-chip Boot Program
True Read-While-Write Operation
– Programming Lock for Software Security

• **Peripheral Features**

– Two 8-bit Timer/Counters with Separate Prescaler, one Compare Mode
– One 16-bit Timer/Counter with Separate Prescaler, Compare Mode, and Capture Mode
– Real Time Counter with Separate Oscillator
– Three PWM Channels
– 8-channel ADC in TQFP and QFN/MLF package
– Eight Channels 10-bit Accuracy
– 6-channel ADC in PDIP
package Six Channels 10-bit
Accuracy
– Byte-oriented Two-wire Serial Interface
– Programmable Serial USART
– Master/Slave SPI Serial Interface
– Programmable Watchdog Timer with Separate On-chip Oscillator
– On-chip Analog Comparator

• **Special Microcontroller Features**

– Power-on Reset and Programmable Brown-out Detection
– Internal Calibrated RC Oscillator
– External and Internal Interrupt Sources
– Five Sleep Modes: Idle, ADC Noise Reduction, Power-save, Power-down, and Standby.

• I/O and Packages

– 23 Programmable I/O Lines
– 28-lead PDIP, 32-lead TQFP, and 32-pad QFN/MLF

• Operating Voltages

– 2.7V - 5.5V (ATmega8L)
– 4.5V - 5.5V (ATmega8)

• Speed Grades

– 0 - 8MHz (ATmega8L)
– 0 - 16MHz (ATmega8)

• Power Consumption at 4Mhz, 3V, 25oC

– Active: 3.6mA
– Idle Mode: 1.0mA
– Power-down Mode: 0.5µA

5.3 UML Diagrams

UML is a standard language for specifying, visualizing, constructing, and documenting the artifacts of software systems. UML was created by the Object Management Group (OMG) and UML 1.0 specification draft was proposed to the OMG in January 1997. There are several types of UML diagrams and each one of them serves a different purpose regardless of whether it is being designed before the implementation or after (as part of documentation).

- Behavioral UML Diagram
- Structural UML Diagram

The different types are broken down as follows:

- Sequence Diagram
- Use Case Diagram
- Data flow Diagram
- Class Diagram
- Component Diagram
- Activity Diagram

Sequence Diagram:

Represent the objects participating in the interaction horizontally and time vertically. A Use Case is a kind of behavioral classifier that represents a declaration of an offered behavior. Each use case specifies some behavior, possibly including variants that the subject can perform in collaboration with one or more actors. Use cases define the offered behavior of the subject without reference to its internal structure. These behaviors, involving interactions between the actor and the subject, may result in changes to the state of the subject and communications with its environment. A sequence diagram is a Unified Modeling Language (UML) diagram that illustrates the sequence of messages between objects in an interaction. A sequence diagram consists of a group of objects that are represented by lifelines, and the messages that they exchange over time during the interaction. A sequence diagram shows the sequence of messages passed between objects. Sequence diagrams can also show the control structures between objects. Sequence Diagrams are time focus and they show the order of the interaction visually by using the vertical axis of the diagram to represent time what messages are sent. Time in a sequence diagram is all a about ordering, not duration.

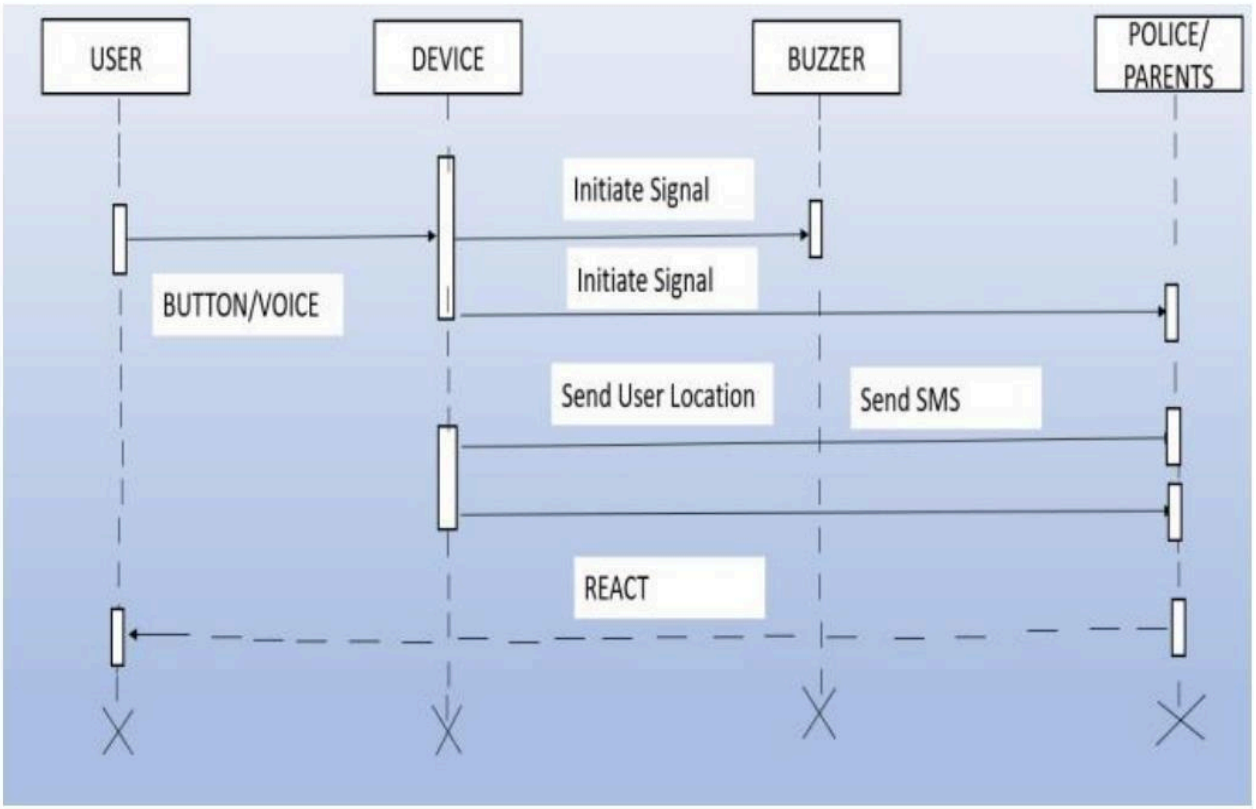

Figure 5.3.1 Sequence diagram

Use Case Diagram:

A use case diagram in the Unified Modeling Language (UML) is a type of behavioral diagram defined by and created from a Use-case analysis. Its purpose is to present a graphical overview of the functionality provided by a system in terms of actors, their goals (represented as use cases), and any dependencies between those use cases. The main purpose of a use case diagram is to show what system functions are performed for which actor. Roles of the actors in the system can be depicted.

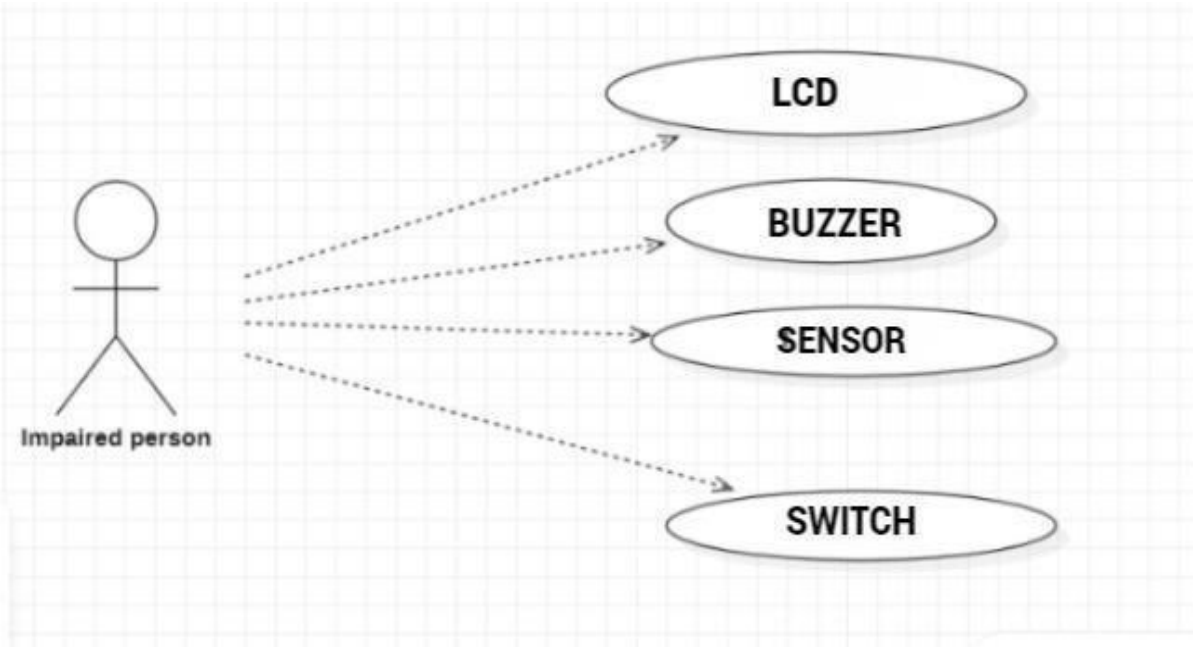

5.3.2 Use case diagram

Data Flow Diagram

A Data Flow Diagram (DFD) is a traditional visual representation of the information flows with in a system. A neat and clear DFD can depict the right amount of the system requirement graphically. It may be used as a communication tool between a system analyst and any person who plays a part in the order that acts as a starting point for redesigning a system. The DFD is also called as a data flow graph or bubble chart. A data flow diagram shows the way information flows through a process or system. It includes data inputs and outputs, data stores, and the various subprocesses the data moves through. DFDs are built using standardized symbols and notation to describe various entities and their relationships.

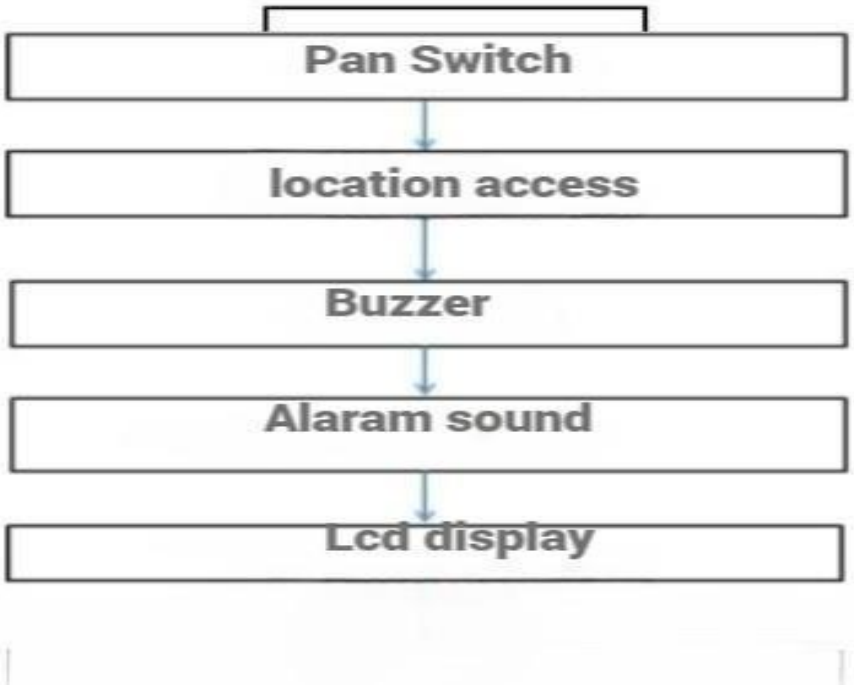

5.3.3 Data flow Diagram

Class Diagram

In software engineering, a class diagram in the Unified Modelling Language (UML)is a type of static structure diagram that describes the structure of a system by showing the system's classes, their attributes, operations (or methods), and the relationships among the classes. It explains which class contains information.

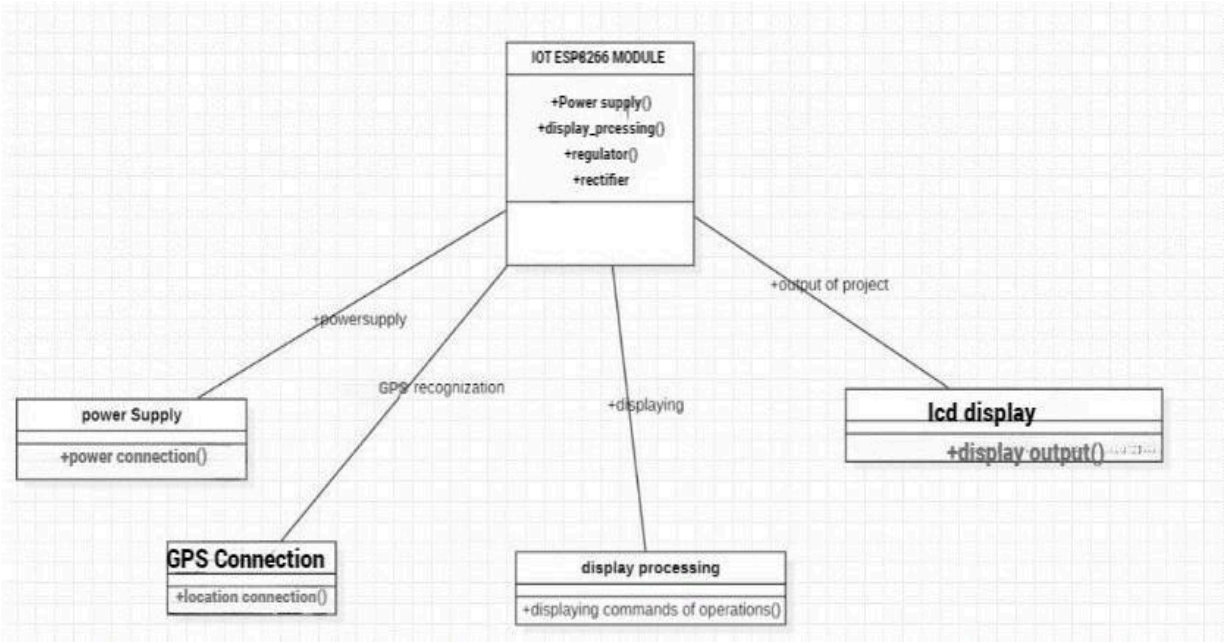

5.3.4 Class Diagram

Class diagram is a static diagram. It represents the static view of an application. Class diagram is not only used for visualizing, describing, and documenting different aspects of a system but also for constructing executable code of the software application. A class may be involved in one or more relationships with other classes. A relationship can be one of the following types (Refer to the figure on the right for the graphical representation of relationships). The data then passes to and through several other components via various connections before it is output at the ports on the left.

Component Diagram

It is used to model the physical component of a system and the relationship between them. It is a type of structural diagram that shows the organization and dependencies of the components within a system. A component diagram breaks down the actual system under development into various high levels of functionality. A component represents a modular part of a system that encapsulates its contents and whose manifestation is replaceable within its environment. In UML 2, a component is drawn as a rectangle with optional.

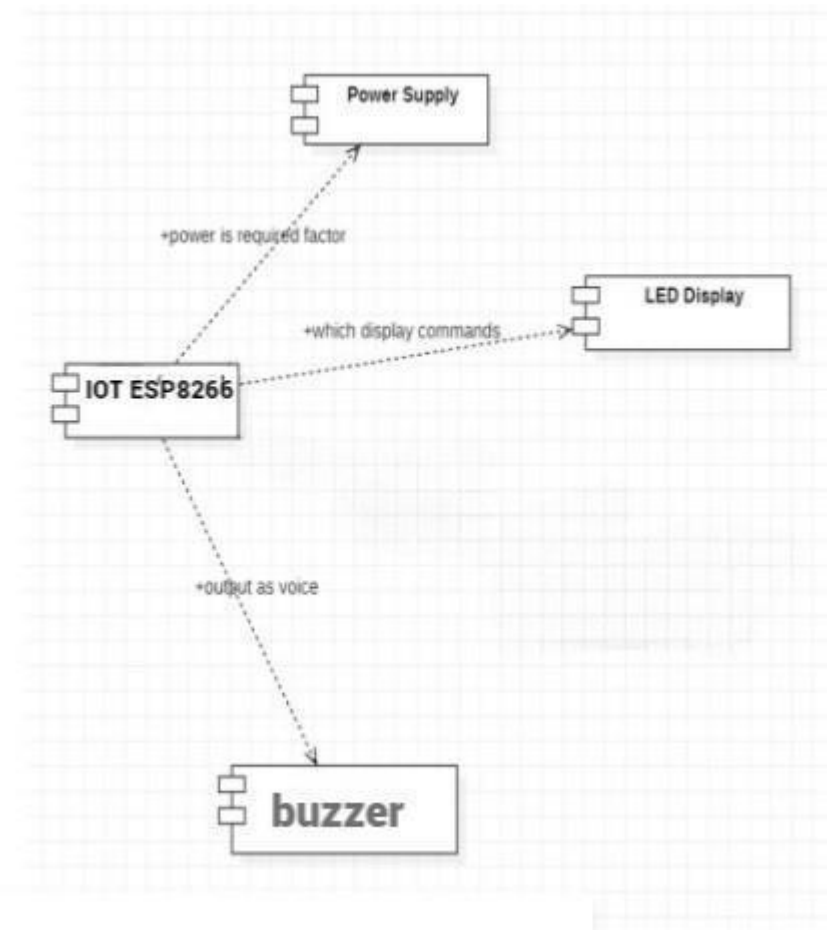

5.3.5 Component Diagram

Activity Diagram

The process flows in the system are captured in the activity diagram. Similar to a state diagram, an activity diagram also consists of activities, actions, transitions, initial and final states, and guard conditions. You can make an activity diagram by connecting and joining various activity states. The starting point is usually marked with a dark, filled-in circle with an arrow pointing to the next state usually a rectangle with rounded corners. All action flows are represented with arrows indicating the transitions from state to state. Activities modeled can be sequential and concurrent. You can make an activity diagram by connecting and joining various activity states. The starting point is usually marked with a dark, filled-in circle with an arrow pointing to the next state usually a rectangle with rounded corners. All action flows are represented with arrows indicating A small filled circle followed by an arrow represents the initial action.

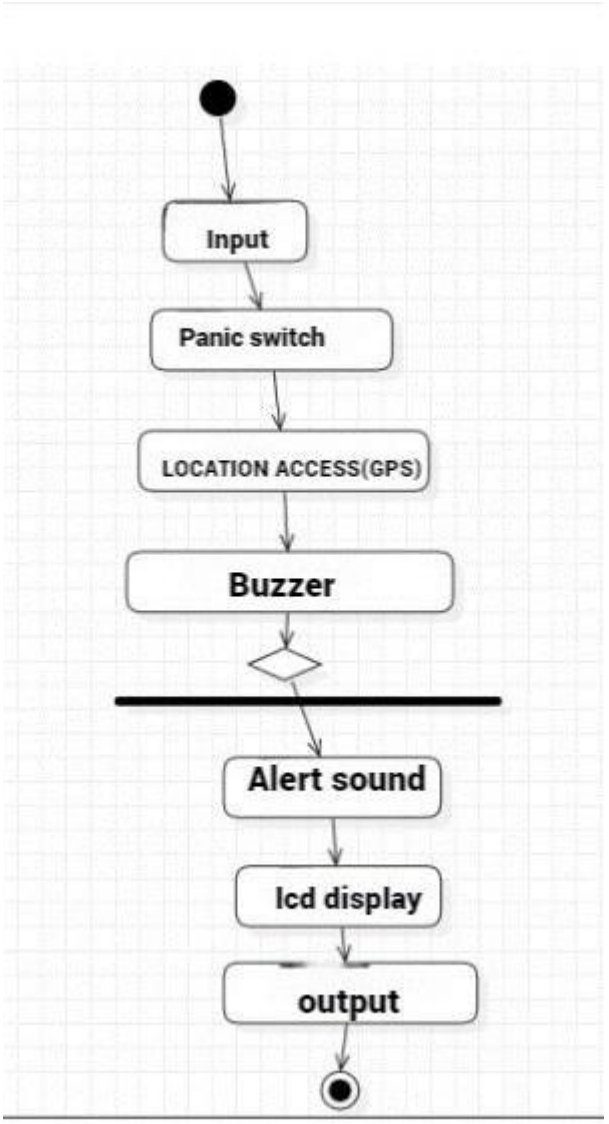

5..6 Activity Diagram

5.3 Functional Requirements

In software engineering and systems engineering, a functional requirement defines a function of a system or its component, where a function is described as a specification of behavior between outputs and inputs.

Functional requirements may involve calculations, technical details, data manipulation and processing, and other specific functionality that define what a system is supposed to accomplish. Behavioral requirements describe all the cases where the system uses the functional requirements, these are captured in use cases. Functional requirements are supported by non-functional requirements (also known as "quality requirements"), which impose constraints on the design or implementation (such as performance requirements, security, or reliability). Generally, functional requirements are expressed in the form "system must do <requirement>," while non-functional requirements take form "system shall be <requirement>." The plan for implementing functional requirements is detailed in the system design, whereas *non-functional* requirements are detailed in the system architecture.

As defined in requirements engineering, functional requirements specify particular results of a system. This should be contrasted with non-functional requirements, which specify overall characteristics such as cost and reliability. Functional requirements drive the application architecture of a system, while non-functional requirements drive the technical architecture of a system.

In some cases a requirements analyst generates use cases after gathering and validating a set of functional requirements. The hierarchy of functional requirements collection and change, broadly speaking, is: user/stakeholder request → analyze → use case → incorporate. Stakeholders make a request; systems engineers attempt to discuss, observe, and understand the aspects of the requirement; use cases, entity relationship diagrams, and other models are built to validate the requirement; and, if documented and approved, the requirement is implemented/incorporated. Each use case illustrates behavioral scenarios through one or more functional requirements. Often, though, an analyst will begin by eliciting a set of use cases, from which the analyst can derive the functional requirements that must be implemented to allow a user to perform each use case.

The functional requirements for the project are include the following aspects:

User-Activated Panic Button: The system should feature a user-triggered panic button for sending emergency alerts.

Accurate GPS Location Tracking: The solution must provide precise GPS-based location tracking, with a range of 2-5 kilometers, ensuring the user's location is constantly updated and

known.

Alert Transmission: Alerts must be transmitted promptly to registered contacts, ensuring a quick response in emergencies. User-Friendly Interface: The interface should be intuitive and easy to use, ensuring that women of all backgrounds can comfortably navigate the system.

IOT Integration: The project must integrate with the Internet of Things (IoT) for seamless communication with other devices and services.

Affordability: The solution should be cost-effective to ensure accessibility to a broad user base.

5.4 Non-Functional Requirements

NON-FUNCTIONAL REQUIREMENT (NFR) specifies the quality attribute of a software system. They judge the software system based on Responsiveness, Usability, Security, Portability and other non- functional standards that are critical to the success of the software system. Example of nonfunctional requirement, "how fast does the website load?" Failing to meet non-functional requirements can result in systems that fail to satisfy user needs.

Non-functional Requirements allows you to impose constraints or restrictions on the design of the system across the various agile backlogs. Example, the site should load in 3 seconds when the number of simultaneous users are > 10000. Description of non-functional requirements is just as critical as a functional requirement.

- Usability requirement
- Serviceability requirement
- Manageability requirement
- Recoverability requirement
- Security requirement
- Data Integrity requirement
- Capacity requirement
- Availability requirement
- Scalability requirement
- Interoperability requirement
- Reliability requirement
- Maintainability requirement
- Regulatory requirement
- Environmental requirement

The non-functional requirements encompass various aspects of the project's design and implementation: Reliability: The system must be reliable, ensuring that emergency alerts and tracking work consistently and accurately.

Scalability: The solution should be designed with potential future enhancements in mind, allowing it to adapt to evolving security needs.

User-Friendliness: The interface should be intuitive, ensuring ease of use for women in diverse environments and situations.

Affordability: The project should be cost-effective, making it accessible to women from various economic backgrounds.

Security: Security measures should be implemented to protect user data and privacy, ensuring that personal information is handled with care and confidentiality

Advantages of Non-Functional Requirement

Benefits/pros of Non-functional testing are:

- The nonfunctional requirements ensure the software system follow legal and compliance rules.
- They ensure the reliability, availability, and performance of the software system.
- They ensure good user experience and ease of operating the software.
- They help in formulating security policy of the software system.

Disadvantages of Non-functional requirement

Cons/drawbacks of Non-function requirement are:

- None functional requirement may affect the various high-level software sub system.
- They require special consideration during the software architecture/high-level design phase which increases costs.
- Their implementation does not usually map to the specific software sub-system,
- It is tough to modify non-functional once you pass the architecture phase.
- The biggest disadvantage of Non-functional requirement is that it may affect the various high-level software subsystems.

6. CODE AND IMPLEMENTATION

6.1 Source code

```
=====declation==========

#include <LiquidCrystal.h>

#include <SoftwareSerial.h>

LiquidCrystal lcd(6,7,5,4,3,2);

int vib    = A0;

int button = A1;

int buzzer = 12;

int gps=8;

========== SETUP=====================

void setup()

{

  Serial.begin(9600);

  pinMode(vib, INPUT);

  pinMode(button, INPUT);

  pinMode(buzzer, OUTPUT);

  lcd.begin(16,2);

   lcd.setCursor(0, 0);lcd.print(" IOT Women Safety");
```

```
  lcd.setCursor(0, 1);lcd.print("    System

  "); delay(2500);

  get_gps();

}

================ LOGIC -=========

void loop()

{

   if(digitalRead(vib) == HIGH)

   {

     lcd.setCursor(0,0);lcd.print("Emergency ");

      digitalWrite(buzzer,HIGH);

      upload(finallat,finallong,finallat,finallong,"Emergency","-");

    }

     if(digitalRead(vib) == LOW)

    {

        lcd.setCursor(0,0);lcd.print("           ");

    }

    if(digitalRead(button) == HIGH)

       {

        lcd.setCursor(0,1);lcd.print("Panic ");

          digitalWrite(buzzer,HIGH);
```

```
    upload(finallat,finallong,finallat,finallong,"-","Panic");
  }
 if(digitalRead(button) == LOW)
   {
    lcd.setCursor(0,1);lcd.print("           ");
   }
    delay(300);
}
  void upload(const char *s1,const char *s2,const char *s3,const char *s4)
   void upload(unsigned char *slt,unsigned char *sln,unsigned char *s1,unsigned char
 *s2,const char *s3)
{
  delay(2000);
  lcd.setCursor(15, 1);lcd.print("U");
  myserialFlush();
  mySerial.println("AT+CIPSTART=4,\"TCP\",\"projectsfactoryserver.in\",80");
  mySerial.println("AT+CIPCLOSE");
  lcd.setCursor(15, 1);lcd.print(" ");
}
  void get_gps()
{
  lcd.clear();
  lcd.print("Getting GPS Data");
```

```
lcd.setCursor(0,1);
lcd.print("Please Wait
");
gps_status=0;
 int x=0;
 while(gps_status==0)
 {
  gpsEvent();
  int
  str_lenth=i;
  coordinate2dec();
  i=0;x=0;
  str_lenth=0;
 }
```

6.3 Software Environment

PYTHON

Python is a general-purpose interpreted, interactive, object-oriented, and high-level programming language. An interpreted language, Python has a design philosophy that emphasizes code readability (notably using whitespace indentation to delimit code blocks rather than curly brackets or keywords), and a syntax that allows programmers to express concepts in fewer lines of code than might be used in languages such as C++ or Java. It provides constructs that enable clear programming on both small and large scales. Python interpreters are available for many operating systems.

DJANGO

Django is a high-level Python Web framework that encourages rapid development and clean, pragmatic design. Built by experienced developers, it takes care of much of the hassle of Web development, so you can focus on writing your app without needing to reinvent the wheel. It’s free and open source. Django's primary goal is to ease the creation of complex, database-driven

websites. Django emphasizes reusability and "pluggability" of components, rapid development, and the principle of don't repeat yourself. Python is used throughout, even for settings files and data models.

6.3 Data Dictionary:

int vib: Represents the analog pin connected to a vibration sensor.

• int button: Represents the analog pin connected to a button.

• int buzzer: Represents the digital pin connected to a buzzer.

• int gps: Represents the digital pin connected to the GPS module.

• Liquid Crystal lcd: Initializes an LCD screen.

• void setup(): Initializes the setup routine, configuring pins, setting up the LCD display, and attempting to get GPS coordinates.

• void loop(): Contains the main loop for monitoring vibration and button states, triggering emergency and panic responses accordingly.

• void upload(...): A function (overloaded) for uploading data to a server, including GPS coordinates and event types.

• void getgps(): A function for obtaining GPS data.

7. SYSTEM TEST CASES

S.NO	TEST CASES	EXPECTED RESULT	RESULT	REMARKS
1	**GPS Functionality:**	Test Case-1: The GPS coordinates should update in real-time on the monitoring system. Test case-2: Check GPS signal strength in various environments.	PASS	Test case-1:If not Updating the real -time Monitoring then it will fail. Test case-2: If not Checking the GPS signal strength then it will fail.
2	**Buzzer Functionality:**	Test Case-1: Confirm the buzzer activation upon triggering the panic button. Test Case-2: The buzzer should stop sounding once the user is in a safe zone.	PASS	Test case-1: If not activating the buzzer upon triggering the panic button then it will fail Test Case-2: If the buzzer sounds in safe zone then it will fail

3	**LCD Display:**	Test Case-1: The LCD should show the user's location and a distress message. Test case-2: The LCD should update to reflect the system's current status.	PASS	Test Case-1:If the Lcd not showing user's location then it will fail Test Case-2: If Lcd not Updating System's Current Status then it will Fail
4	**Vibration Sensor:**	Test Case-1: The system should trigger an alert when a significant vibration is detected. Test Case-2: The system should detect vibrations quickly and initiate the appropriate response.	PASS	Test Case-1:If the system did not Trigger an alert when Vibration detected then it will fail Test-case-2:If the system did not intiate appropriate response then it will fail
5	**Switch:**	Test Case-1: The system should change its status accordingly and provide feedback through the LCD display. Test Case-2: The switch should remain stable and not change its position unintentionally.	PASS	Test case-1:If the system does not provide feedback through the lcd then it will fail Test case-2:If the switch changes its position then it will fail
6	**IOT (Internet of Things):**	Test Case-1: The system should establish a stable connection, allowing for remote monitoring and control. Test case-2: The system should have secure communication protocols, preventing unauthorized access or tampering.	PASS	Test Case-1:If the system did not establish a stable connection then it will fail Test case-2:If the system did not have secure communication protocols the it will fail

7.1 Types of Test Cases

Unit testing

Unit testing involves the design of test cases that validate that the internal program logic is functioning properly, and that program inputs produce valid outputs. All decision branches and internal code flow should be validated. It is the testing of individual software units of the application.

Integration testing

Integration tests are designed to test integrated software components to determine if they actually run as one program. Testing is event driven and is more concerned with the basic outcome of screens or fields.

Functional test

Functional tests provide systematic demonstrations that functions tested are available as specified by the business and technical requirements, system documentation, and user manuals.

Functional testing is centered on the following items:

Valid Input : identified classes of valid input must be accepted.

Invalid Input : identified classes of invalid input must be

rejected. Functions : identified functions must be exercised.

Output : identified classes of application outputs must be

exercised. Systems/Procedures : interfacing systems or procedures must be invoked.

7.2 Test strategy and approach

Field testing will be performed manually and functional tests will be written in detail.

Test objectives

- All field entries must work properly.
- Pages must be activated from the identified link.
- The entry screen, messages and responses must not be delayed.

Features to be tested

- Verify that the entries are of the correct format
- No duplicate entries should be allowed.
- All links should take the user to the correct page.

Test Results

All the test cases mentioned above passed successfully. No defects encountered.

Advantages and Disadvantages

1. auto alerting system
2. wireless data access through IOT
3. Efficient and low cost design.
4. Low power consumption.

Applications:

Personal Safety Empowerment: Smart security devices empower women to take control of their personal safety by providing a means to request assistance, report incidents, and stay connected in potentially vulnerable situations.

Domestic Violence Prevention: In cases of domestic violence, the device can provide a discreet means of alerting authorities or support networks to intervene and ensure the safety of the individual.

Emergency Response: These devices are invaluable in emergency situations, enabling women to quickly seek help in cases of accidents, medical emergencies, or when feeling threatened, which can significantly reduce response times.

Safety in Public Spaces: Women can use the device to feel safer in public spaces, parks, and recreational areas by having a means of immediate communication with security services. **Enhanced Confidence:** The use of smart security devices instills confidence in women, allowing them to move freely in public spaces, travel alone, or meet new people with the assurance of immediate assistance if required.

Preventing Violence and Harassment: The devices have applications in preventing violence, harassment, and domestic abuse by enabling discreet alerts to authorities or support networks, potentially deterring aggressors.

Versatile Applications: These devices have versatile applications, ranging from personal safety in public spaces, educational institutions, and workplaces to supporting community policing and security services, making them a powerful tool in addressing women's safety concerns.

Social Services and NGOs: Organizations working to support women's safety and well-being can provide the device to their beneficiaries as part of their services.

8. OUTPUT AND SCREENS

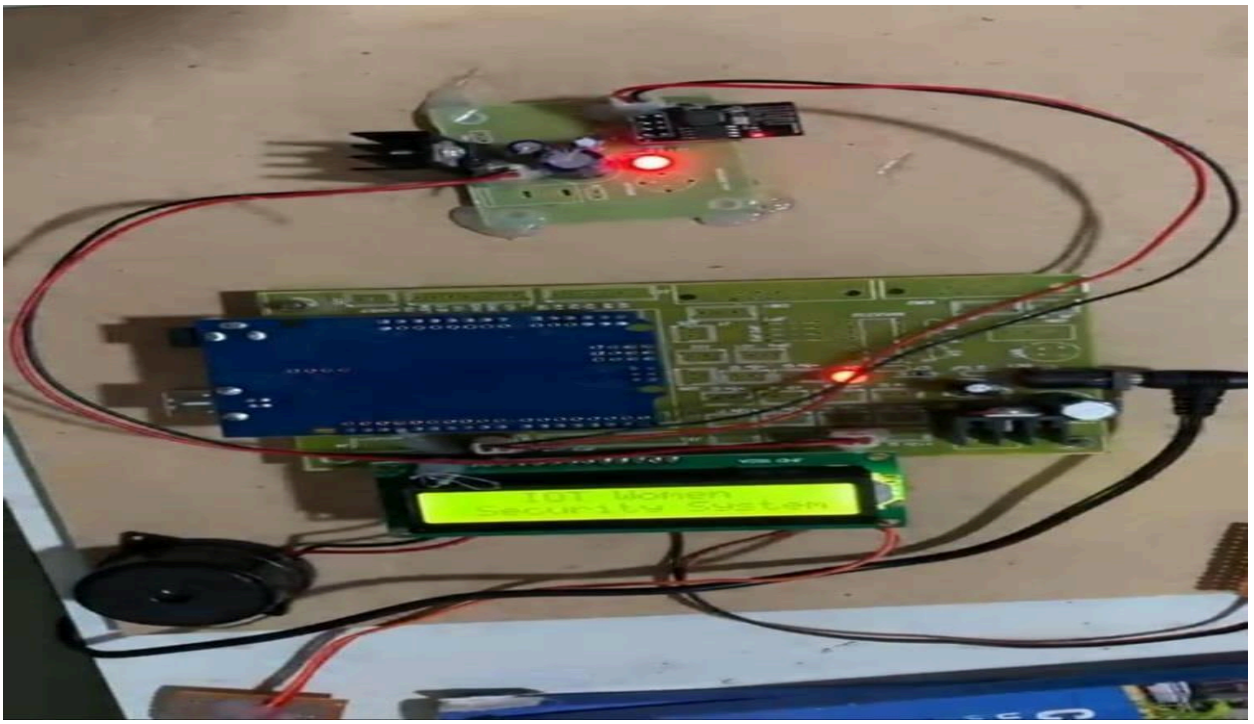

IOT setup displayed on the display

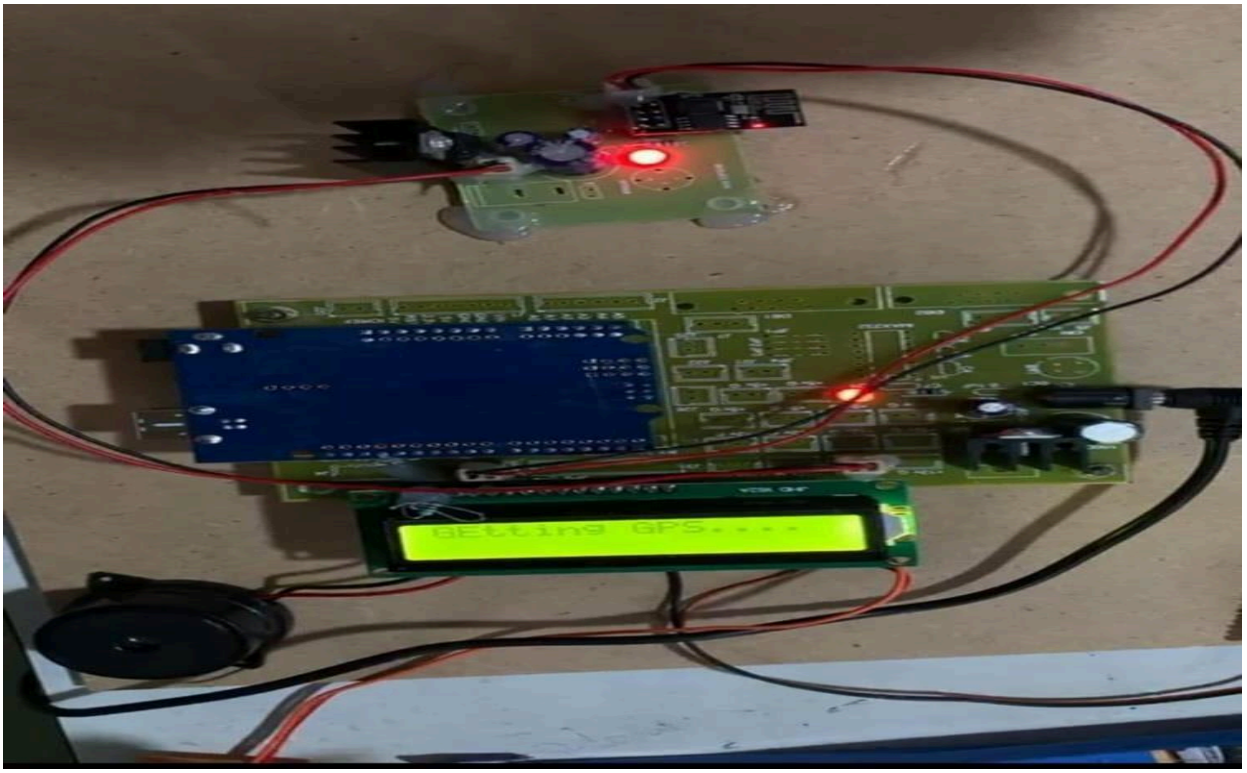

Notifying that setup is trying to get GPS

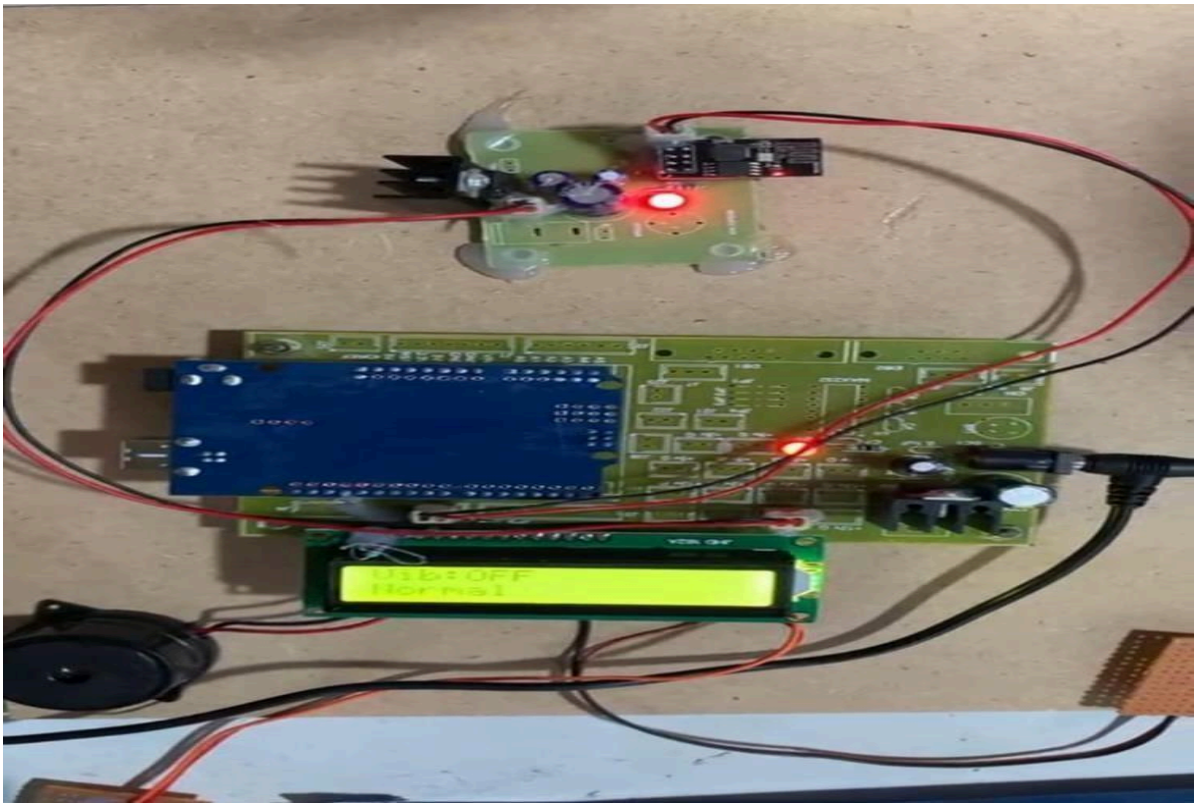

Display of vibration is in ON/OFF mode

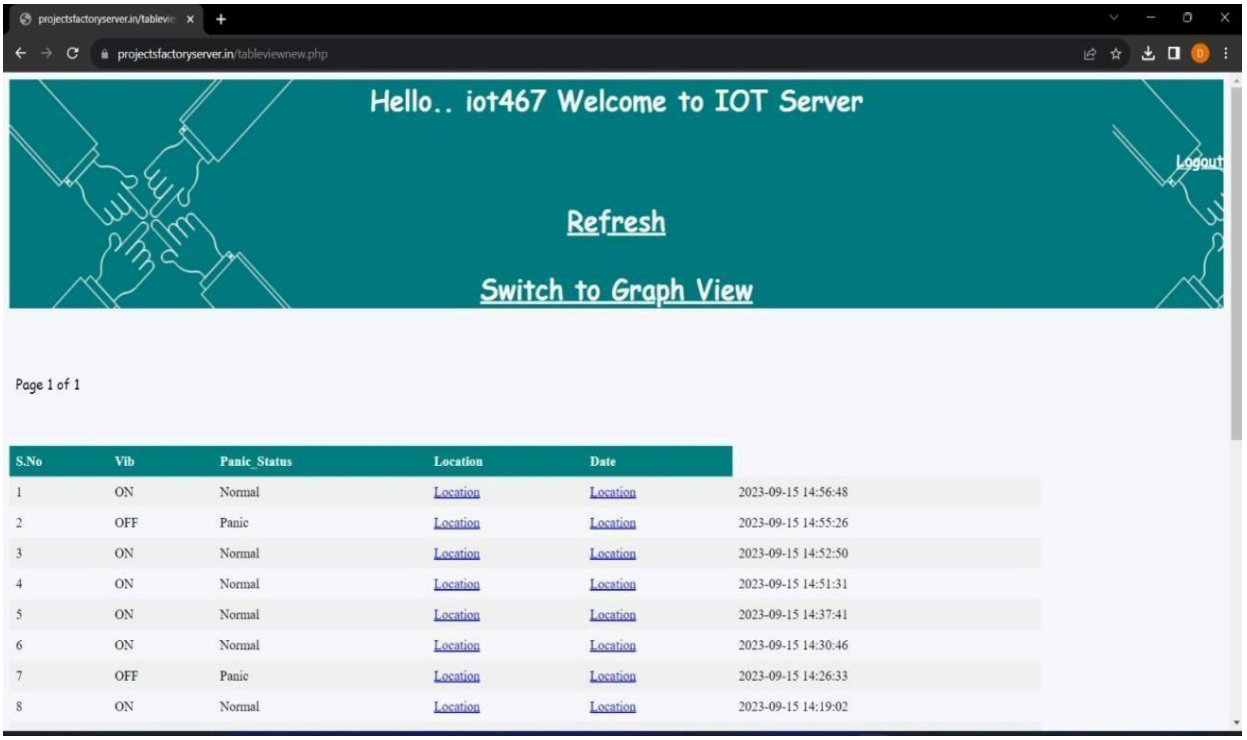

S.No	Vib	Panic_Status	Location	Date	
1	ON	Normal	Location	Location	2023-09-15 14:56:48
2	OFF	Panic	Location	Location	2023-09-15 14:55:26
3	ON	Normal	Location	Location	2023-09-15 14:52:50
4	ON	Normal	Location	Location	2023-09-15 14:51:31
5	ON	Normal	Location	Location	2023-09-15 14:37:41
6	ON	Normal	Location	Location	2023-09-15 14:30:46
7	OFF	Panic	Location	Location	2023-09-15 14:26:33
8	ON	Normal	Location	Location	2023-09-15 14:19:02

The display of locations in the IOT server

projectsfactoryserver.in/tableviewnew.php

S.No	Vib	Panic_Status	Location	Date	
1	ON	Normal	Location	Location	2023-09-15 14:56:48
2	OFF	Panic	Location	Location	2023-09-15 14:55:26
3	ON	Normal	Location	Location	2023-09-15 14:52:50
4	ON	Normal	Location	Location	2023-09-15 14:51:31
5	ON	Normal	Location	Location	2023-09-15 14:37:41
6	ON	Normal	Location	Location	2023-09-15 14:30:46
7	OFF	Panic	Location	Location	2023-09-15 14:26:33
8	ON	Normal	Location	Location	2023-09-15 14:19:02
9	ON	Normal	Location	Location	2023-09-15 14:18:25
10	ON	Normal	Location	Location	2023-09-15 14:16:34
11	OFF	Panic	Location	Location	2023-09-15 14:15:59
12	ON		Location	Location	2023-09-15 14:15:30
13	OFF	Panic	Location	Location	2023-08-10 18:34:59
14	ON	Normal	Location	Location	2023-08-10 18:34:16
15	OFF	Panic	Location	Location	2023-08-10 18:33:38
16	ON	Normal	Location	Location	2023-08-10 18:32:55
17	Panic		Location	Location	2023-08-10 18:29:54

The display of past location details in the IOT server

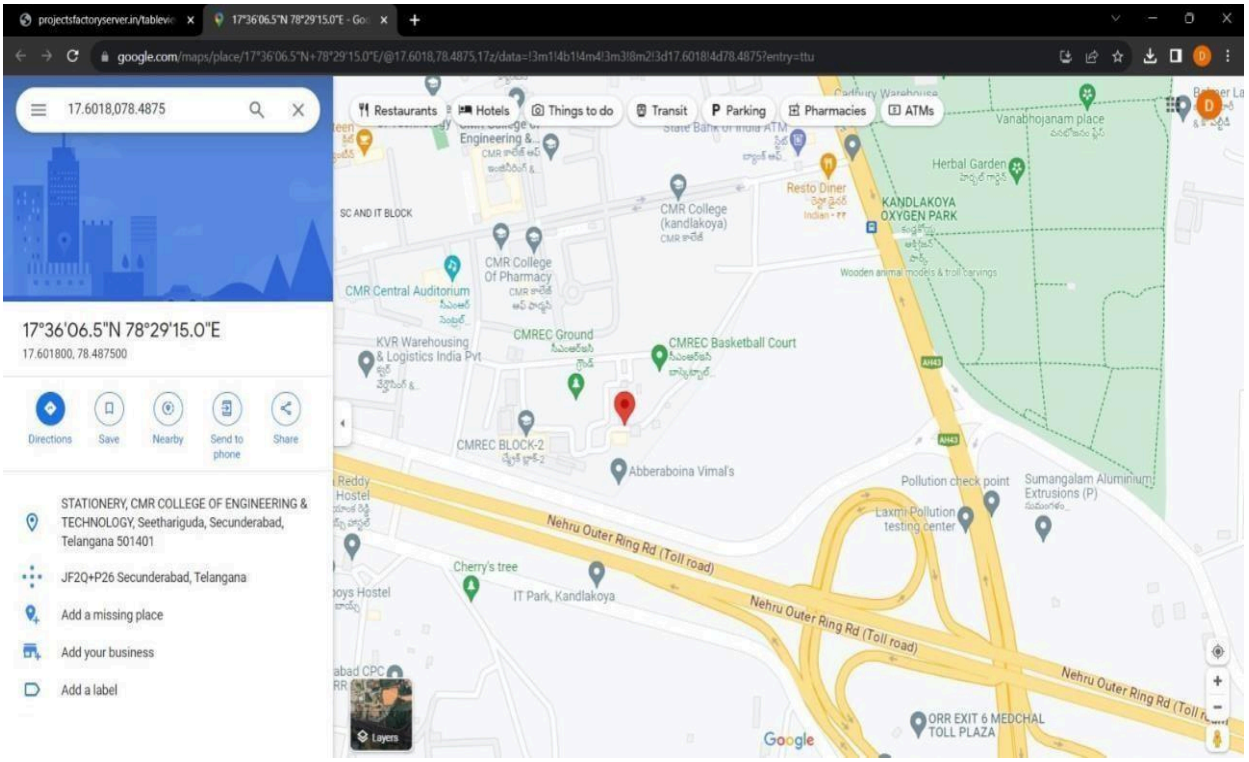

Location in Google Maps

9. CONCLUSION

We designed the hardware of internet of things based woman security monitoring system. Al modules are integrated to the raspberry pi processor. Hardware model of Arduino woman security system which integrated IOT, GPS, LCD, Vibration sensor. When button pressed then automatically sends the exact location. From the above discussed details we can design the system much more efficient using the technologies such as IOT, GPS, and Google Maps etc.., for ensuring the women safety. The system can be implemented in the form of women wearables. Women can use this security system when they feel they are not in a safe situation. For example when they are traveling alone in auto/cab during night or when they are travelling with anonymous person we can use this device. If they do one click the system can send the exact current location of the victim to the registered contact numbers. Then we can capture an image and it can be shared through telegram to the registered numbers as evidence. So this will be very useful for further investigation.

10. FUTURE ENHANCEMENTS

- Incorporating Bluetooth or RFID technology for proximity-based alerts and tracking within a limited range.
- Implementing machine learning algorithms can enable the device to learn and adapt to a woman's routine, identifying abnormal behavior patterns and sending alerts when necessary.
- Implementing a mesh network of interconnected devices for improved coverage and communication.
- Integrating voice recognition and voice-activated commands for hands-free operation and emergency assistance.
- Leveraging sensors like accelerometers and gyroscopes to detect and analyze movement patterns, providing insights into potential threats or distress situations.
- Integration with wearable devices, such as smartwatches, for more convenient access to safety features.
- Implementing advanced algorithms to reduce false alarms and ensure that emergency responses are reserved for genuine crises.
- Providing an option for anonymous reporting of incidents can encourage users to report problems without fear of retribution.
- Incorporation of advanced analytics and machine learning algorithms to detect patterns and identify potential risks or threats.
- Implementation of voice recognition technology to allow hands-free activation of safety features.
- Implementing machine learning algorithms can enable the device to learn and adapt to a woman's routine, identifying abnormal behavior patterns and sending alerts when necessary.
- Integration with transportation services to provide employees with safe and reliable transportation options.
- Integration with social media platforms to enable employees to share their location with trusted contacts in real-time.
- Utilizing Wi-Fi or Zigbee for indoor positioning and tracking, enabling precise location monitoring within a specific area.

11. REFERENCES

[1] Dhole, “Mobile Tracking Application for Locating Friends Using LBS”, International journalInnovative research in computer and Communication engineering, vol:1, Issue: 2, April 2023.

[2] S.Vahini, N.Vijaykumar “Efficient Tracking for Women Safety and Security Using IOT” International Journal of Innovative Research in Computer and Communication Engineering Vol.5, Issue 2, February 2023.

[3]B.Chougula, “Smart girls security system,” International Journal of Application or Innovationin Engineering & Management, Volume 3, Issue 4, April 2022. A. Z. M. Tahmidul Kabir, A. M. Mizan, and T. Tasneem, “Safety Solution for Women UsingSmart Band and CWS App,” pp. 566–569, 2022,
DOI: 10.1109/ecti-con49241.2020.9158134

[4] R, Sabari.M, Sorna Rajeswari.M, “An Innovative Approach for women and children’s security Based Location Tracking System” 0n International Conference on Circuit, Power and Computing Technologies IEEE [ICCPCT] 2022.

[5] S. R. Mahmud, S. N. Tumpa, A. B. Islam, C. N. Ferdous, N. Paul, and T. T. Anannya, “BONITAA: A smart approach to support the female rape victims,” 5th IEEE Reg. 10 Humanit. Technol. Conf. 2017, R10- HTC, 2017, vol. 2021-January, pp. 730–733, 2021, DOI: 10.1109/R10- HTC.2017.8289061.

[6] M. N. Islam et al., “SAFeBanD: A wearable device for the safety of women in Bangladesh,” ACM Int. Conf. Proceeding Ser., pp. 76–83, 2021,
DOI: 10.1145/3282353.3282363.

[7] S. Priyanka, Shivashankar, K. P. Roshini, S. P. Reddy, and K. Rakesh, “Design and implementation of SALVUS women safety device,” 2020 3rd IEEE Int. Conf. Recent Trends Electron. Inf. Common. Technol. RTEICT 2018 - Proc., pp. 2438–2442, 2020,
DOI: 10.1109/RTEICT42901.2018.9012442

[8] U. Rai, K. Miglani, A. Saha, B. Sahoo, and M. Vergin Raja Sarobin, “Reach Out Smart SafetyDevice,” 2020 6th Ed. Int. Conf. Wirel. Networks Embed. Syst. WECON 2020 - Proc., pp. 131– 134, 2020,
DOI: 10.1109/WECON.2018.8782071.

[9] N. R. Sogi, P. Chatterjee, U. Nethra, and V. Suma, “SMARISA: A Raspberry Pi Based Smart Ring for Women Safety Using IoT,” Proc. Int. Conf. Inven. Res. Comput. Appl. ICIRCA, 2019, no. Icirca, pp. 451–454, 2019,
DOI: 10.1109/ICIRCA.2018.8597424.

[10] S. K. Punjabi, S. Chaure, U. Ravale, and D. Reddy, “Smart Intelligent System for Women and Child Security,” 2019 IEEE 9th Annu. Inf. Technol. Electron. Mob. Commun. Conf. IEMCON, 2019, no. Apr 9600, pp. 451–454, 2019,
DOI: 10.1109/IEMCON.2018.8614929.

[11] T. Sen, A. Dutta, S. Singh, and V. N. Kumar, “ProTecht - Implementation of an IoT based 3 -Way Women Safety Device,” Proc. 3rd Int. Conf. Electron. Commun. Aerosp. Technol. ICECA, 2019, pp. 1377–1384, 2019,
DOI: 10.1109/ICECA.2019.8821913.

[12] “Smart Intelligent System for Women and Child Security,” Proc. 2nd Int. Conf. Smart Syst. Inven. Technol. ICSSIT 2020, no. Icssit, pp. 1093–1096, 2020,
DOI: 10.1109/ICSSIT4631 4.2019.8987928.

[13] M. R. Tejonidhi, Aishwarya, K. Chaithra, M. K. Dayana, and H. Nagamma, “IoT Based Smart Security Gadget for Women’s Safety,” 1st IEEE Int. Conf. Adv. Inf. Technol. ICAIT 2019 - Proc., pp. 348–352, 2019,
DOI: 10.1109/ICAIT47043.2019.8987242.

14] V. Sharma, Y. Tomar, and D. Vydeki, “Smart Shoe for Women Safety,” 2019 IEEE 10th Int. Conf. Aware. Sci. Technol. iCAST 2019 - Proc., pp. 1–4, 2019,
DOI: 10.1109/ICAwST .2019 .89 23204.

[15] N. Islam, M. R. Hossain, M. Anisuzzaman, A. J. M. Obaidullah, and S. S. Islam, “Design and Implementation of Women Auspice System by Utilizing GPS and GSM,” 2nd Int. Conf. Electr. Comput.Commun. Eng. ECCE, 2019, pp. 1–6, 2020,
DOI: 10.1109/ECACE.2019.8679202.

[16] M. R. Ruman, J. K. Badhon and S. Saha, “Safety Assistant And Harassment Prevention For Women,” 2019 5th International Conference on Advances in Electrical Engineering (ICAEE), Dhaka, Bangladesh, 2019, pp. 346-350,
DOI: 10.1109/ICAEE48663.2019.8975648.

[17] V. Hyndavi, N. S. Nikhita, and S. Rakesh, “Smart Wearable Device for Women Safety Using IoT,” no. Icces, pp. 459–463, 2020,
DOI: 10.1109/icces48766.2020.9138047.